Product data sheet
Characteristics

LV432570
interphase barriers - 0<630A - set of 6



Main

Device short name	Interphase barriers
Range compatibility	Compact Compact NSX Easypact EasyPact CVS PowerPact PowerPact Multistandard Compact Compact INS Compact Compact INV
Accessory / separate part type	Insulation accessories
Quantity per set	Set of 6
[In] rated current	0...630 A

Offer Sustainability

Sustainable offer status	Green Premium product
RoHS (date code: YYWW)	Compliant - since 0818 - Schneider Electric declaration of conformity Schneider Electric declaration of conformity
REACh	Reference not containing SVHC above the threshold Reference not containing SVHC above the threshold
Product environmental profile	Available
Product end of life instructions	Need no specific recycling operations

Contractual warranty

Warranty period	18 months

Disclaimer: This documentation is not intended as a substitute for and is not to be used for determining suitability or reliability of these products for specific user applications

Compact NSX400-630
FPower NSX / GV7
Compact NSJ
Adapter for plug in base
Adaptateur pour socle
Adaptador zócalo

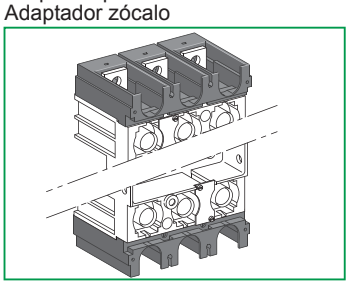

Schneider Electric

GHD16253AA-06

Schneider Electric Industries SAS
35, rue Joseph Monier
CS 30323
F - 92506 Rueil Malmaison Cedex

www.schneider-electric.com

© 2011 Schneider Electric.
All rights reserved.

IMPORTANT NOTE

■ This device must be installed by a qualified electrician.
■ We cannot accept any responsibility for failure to follow the instructions provided in this document.

REMARQUE IMPORTANTE

■ L'installation de cet appareil doit être effectuée par des professionnels de l'électricité.
■ Le non-respect des indications de la présente notice ne saurait engager la responsabilité du constructeur.

OBSERVACIÓN IMPORTANTE

■ La instalación y mantenimiento de este aparato sólo debe ser realizado por electricistas profesionales.
■ El fabricante no se hace responsable en caso de no cumplir con las indicaciones expuestas en este aviso.

重要注意事项

■ 本装置必须由合格的电工进行安装。
■ 我们不承担任何因未遵循本文档中的指南而导致的责任。

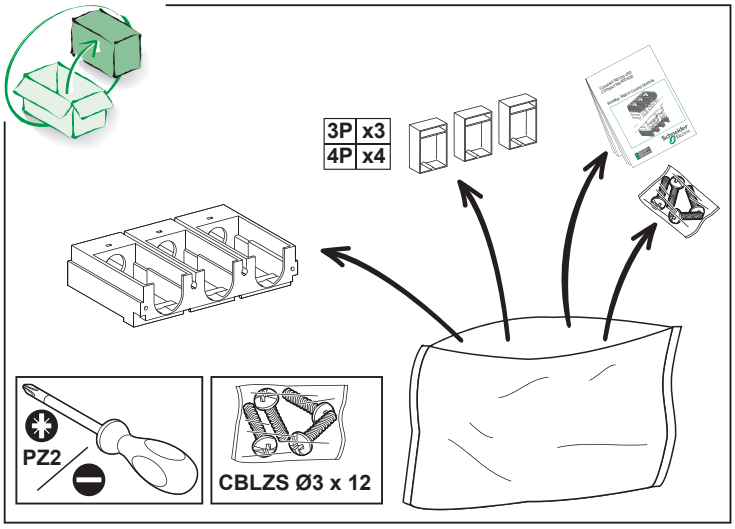

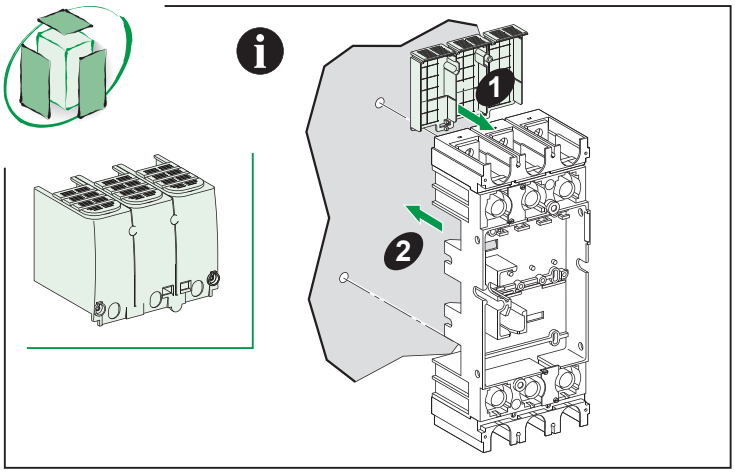

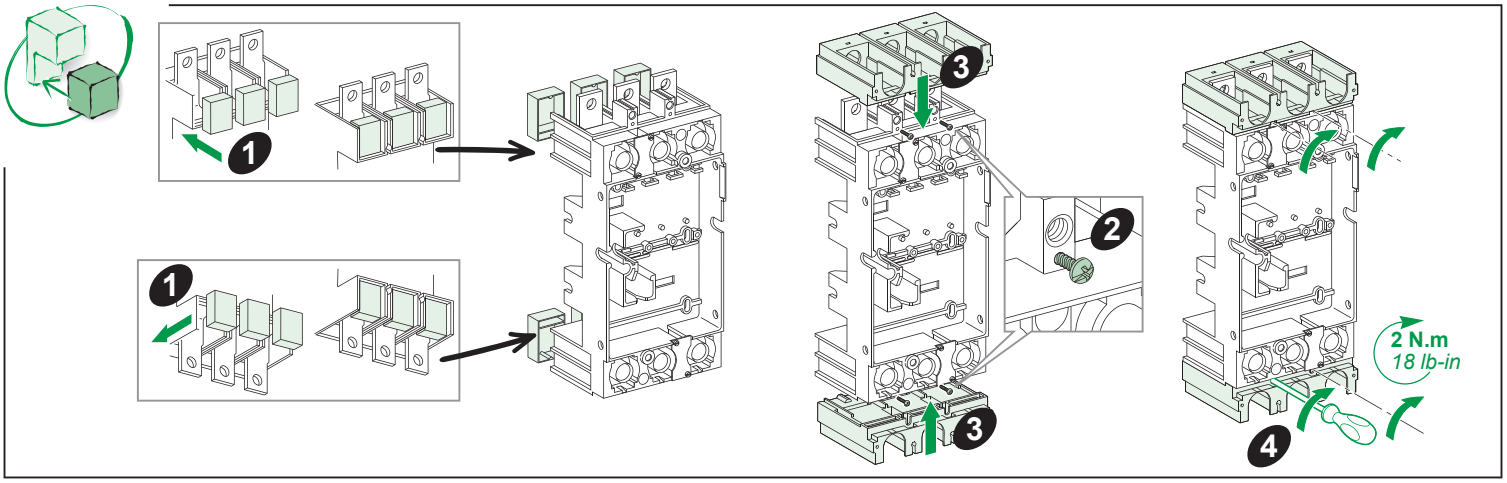

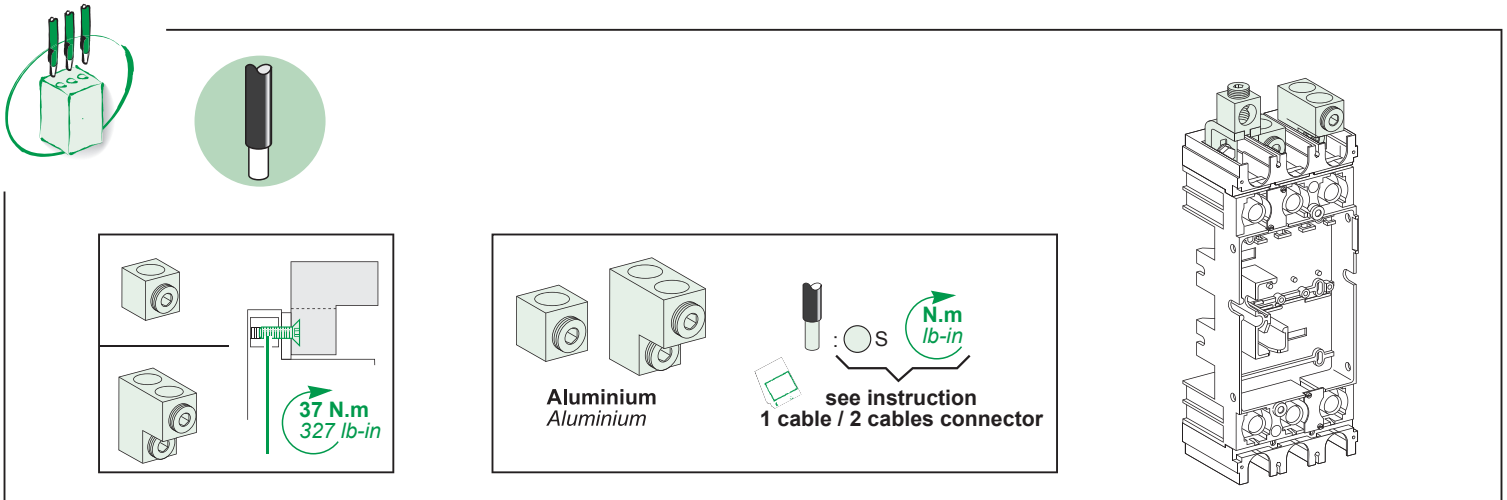

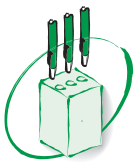

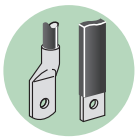

mm
in

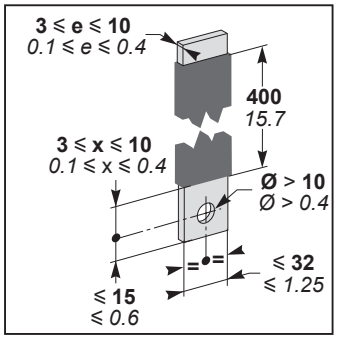

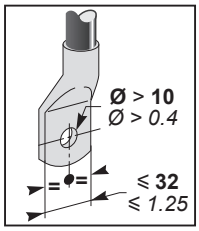

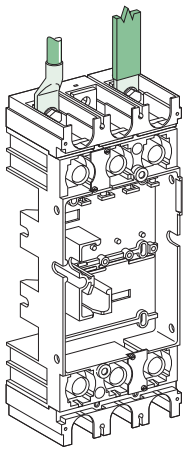

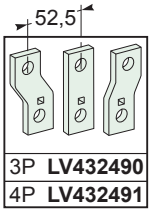

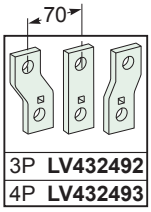

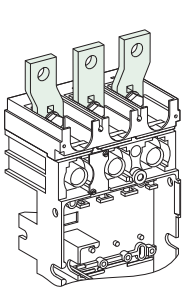

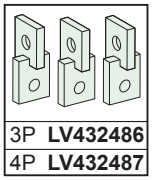

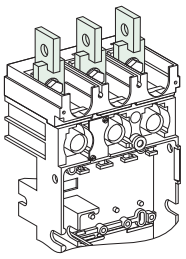

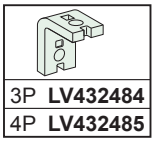

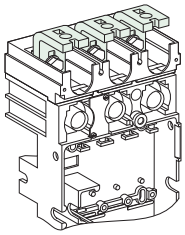

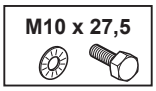

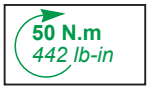



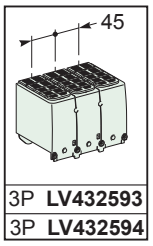

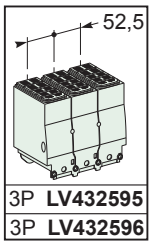

Mandatory U ≥ 500 V
Obligatoire U ≥ 500 V
Obligatorio U ≥ 500 V

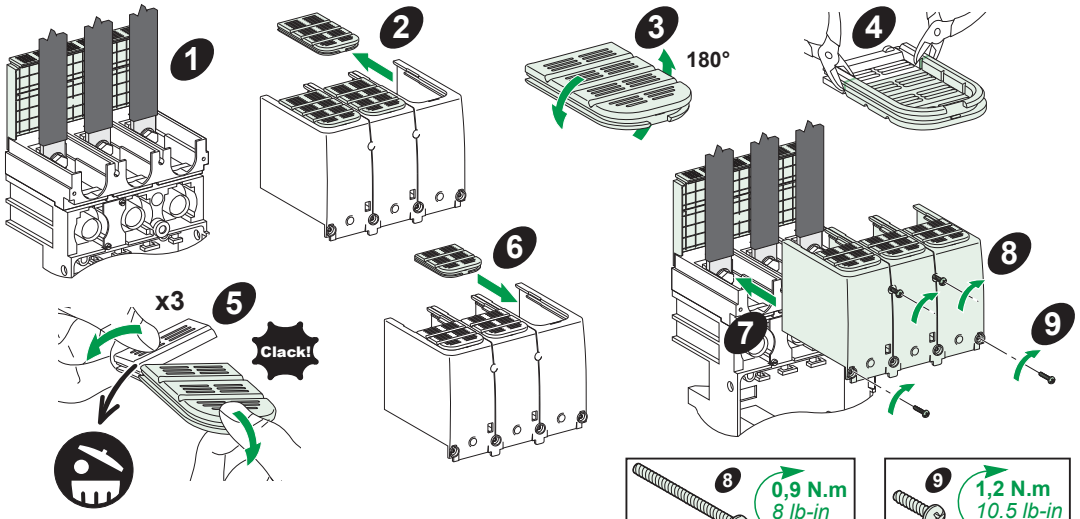

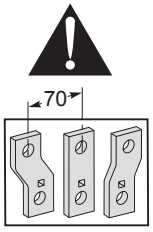

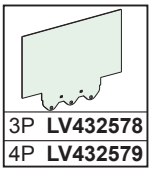

Mandatory U ≥ 500 V
Obligatoire U ≥ 500 V
Obligatorio U ≥ 500 V

