SIEMENS

Show actual product details

Data sheet 3UF7320-1AB00-0



FAIL-SAFE DIGITAL MODULE DM-F LOCAL; FOR FAIL-SAFE SWITCH-OFF VIA HARDWARE SIGNAL; UV: 24 V DC, 2 RELAY ENABLING CIRCUITS; 2 RELAY OUTPUTS; SAFETY FUNCTION CAN BE SELECTED VIA DIL SWITCH; MAX. ERR. SIL (IEC 61508): 3; MAX. ERR. PL (ISO 13849-1): E;

product brandname	SIRIUS
Product designation	DM-FL
Design of the product	for emergency off and safety doors

General technical data	
Product component	
• input for analog temperature sensors	No
• input for ground fault detection	No
Insulation voltage	
• rated value	300 V
Surge voltage resistance rated value	4 000 V
Protection class IP	IP20
Vibration resistance	1-6 Hz / 15 mm; 6-500 Hz / 2 g
Operating frequency maximum	360 1/h
Switching behavior	monostable
Switching capacity current of the NO contacts of the relay outputs at AC-15	
• at 24 V	3 A
• at 120 V	3 A

Subject to change without notice
© Copyright Siemens AG

Switching capacity current of the NO contacts of the relay outputs at DC-13	
• at 24 V	4 A
• at 60 V	0.55 A
• at 125 V	0.22 A
Mechanical service life (switching cycles)	
• typical	10 000 000
Electrical endurance (switching cycles)	
• typical	100 000
Recovery time	
• after power failure typical	8 s
• after opening of the safety circuits typical	250 ms
Equipment marking	
• acc. to DIN EN 61346-2	F
• acc. to DIN EN 81346-2	F
Type of input characteristic	Type 2 in accordance with EN 61131-2

Electromagnetic compatibility

EMC emitted interference	
• acc. to IEC 60947-1	class A
EMI immunity acc. to IEC 60947-1	corresponds to degree of severity 3
Conducted interference	
• due to burst acc. to IEC 61000-4-4	2 kV network connection / 1 kV control connection
• due to conductor-earth surge acc. to IEC 61000-4-5	1 kV
• due to conductor-conductor surge acc. to IEC 61000-4-5	0.5 kV
Field-bound parasitic coupling acc. to IEC 61000-4-3	10 V/m

Inputs/ Outputs

Number of inputs	5
Design of input	
• cascading input/functional switching	Yes
• feedback input	Yes
• Start input	Yes
Number of digital inputs	0
Number of analog inputs	0
Number of sensor inputs	
• 1-channel or 2-channel	1
• 2-channel	1
Number of outputs	2
Number of outputs as contact-affected switching element	2
• as NO contact	

© Copyright Siemens AG

— safety-related instantaneous contact	2
Number of analog outputs	0
Wire length for digital signals maximum	300 m

Product Function

Suitability for use	
• safety switch	Yes
• safety-related circuits	Yes

Installation/ mounting/ dimensions

Mounting position	any
Mounting type	screw and snap-on mounting
Height	106 mm
Width	45 mm
Depth	124 mm

Connections/Terminals

Type of electrical connection	
• for auxiliary and control current circuit	screw-type terminals

Ambient conditions

Installation altitude at height above sea level maximum	2 000 m
Ambient temperature	
• during operation	-25 ... +60 °C
• during storage	-40 ... +80 °C
• during transport	-40 ... +80 °C
Environmental category during operation acc. to IEC 60721	3K6 (no formation of ice, no condensation), 3C3 (no salt mist), 3S2 (sand must not get into the devices), 3M6
Relative humidity during operation	5 ... 95 %

Short-circuit protection

Design of the fuse link	
• for short-circuit protection of relay enabling circuits required	gL/gG: 4 A

Safety related data

Type of the safety-related wiring of the inputs	single-channel and two-channel
Safety Integrity Level (SIL) acc. to IEC 61508	SIL3
Performance level (PL) acc. to EN ISO 13849-1	e
Stop category acc. to DIN EN 60204-1	0
PFHD with high demand rate acc. to EN 62061	0.0000000082 1/h
Average probability of failure on demand (PFDavg) with low demand rate acc. to IEC 61508	0.00001 1/y
T1 value for proof test interval or service life acc. to IEC 61508	20 y
Category acc. to EN 954-1	4

Subject to change without notice
© Copyright Siemens AG

Control circuit/ Control

Type of voltage of the control supply voltage	DC

Certificates/approvals

General Product Approval				EMC	For use in hazardous locations
CCC	CSA	UL		C-Tick	ATEX

For use in hazardous locations	Functional Safety/Safety of Machinery	Declaration of Conformity	Test Certificates		Shipping Approval
Explosionsschutzzertifikat	Baumusterbescheinigung	EG-Konf.	spezielle Prüfbescheinigungen	Typprüfbescheinigung/Werkszeugnis	ABS

Shipping Approval			other		
DNV	GL	RMRS	Bestätigungen	PROFINET-Zertifizierung	Profibus

other
PROFISafe-Zertifizierung

Further information

Information- and Downloadcenter (Catalogs, Brochures,…)
http://www.siemens.com/industrial-controls/catalogs

Industry Mall (Online ordering system)
https://mall.industry.siemens.com/mall/en/en/Catalog/product?mlfb=3UF7320-1AB00-0

Cax online generator
http://support.automation.siemens.com/WW/CAXorder/default.aspx?lang=en&mlfb=3UF7320-1AB00-0

Service&Support (Manuals, Certificates, Characteristics, FAQs,...)
https://support.industry.siemens.com/cs/ww/en/ps/3UF7320-1AB00-0

Image database (product images, 2D dimension drawings, 3D models, device circuit diagrams, EPLAN macros, ...)
http://www.automation.siemens.com/bilddb/cax_de.aspx?mlfb=3UF7320-1AB00-0&lang=en

Subject to change without notice
© Copyright Siemens AG

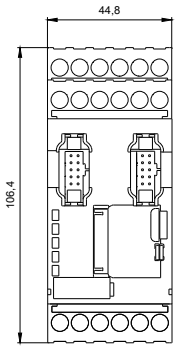

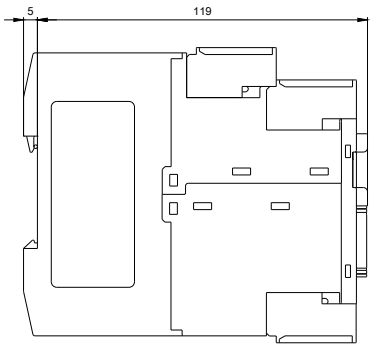

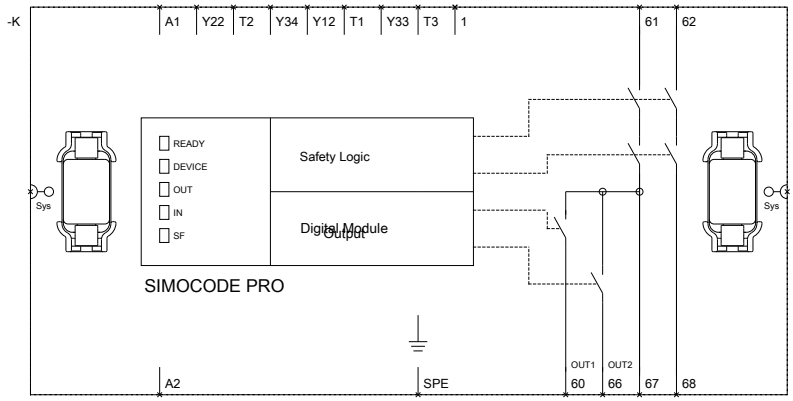

Subject to change without notice
© Copyright Siemens AG

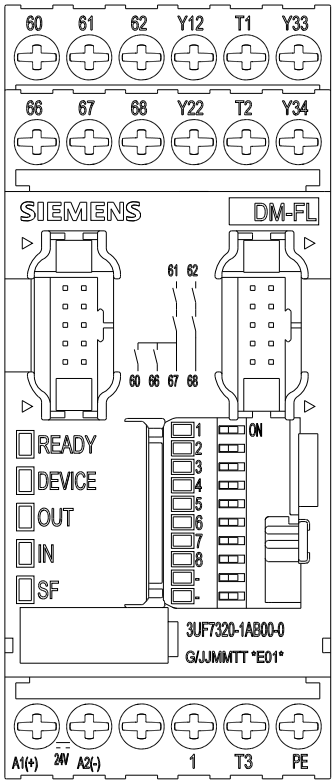

last modified: 02/06/2017

Subject to change without notice
© Copyright Siemens AG