SIEMENS

Data sheet 3SU1900-0BG16-0SA0

Labeling plate for Potentiometer, label black, lettering white, with inscription: 0 to 10



Figure similar

product brandname	SIRIUS ACT
Product designation	Labeling plate
Design of the product	for potentiometers
Product type designation	3SU1

General technical data

Protection class IP	IP66, IP67, IP69(IP69K)
Shock resistance	
• for railway applications acc. to DIN EN 61373	Category 1, Class B
Vibration resistance	
• for railway applications acc. to DIN EN 61373	Category 1, Class B

Accessories

Material of accessory	Plastic
Mounting type of label	without
Marking of the name plate for command devices	SYMBOL: 0 ... 10 (for potentiometer)
Shape of the name plate for command devices	round
Color of the label	black/white (plate/text)
Printed ISO symbols	SYMBOL: 0 ... 10 (for potentiometer)

Subject to change without notice
© Copyright Siemens

Certificates/approvals

General Product Approval		Declaration of Conformity	Test Certificates	other
CSA	UL	EG-Konf.	Declaration of the Compliance with the order	Confirmation

Further information

Information- and Downloadcenter (Catalogs, Brochures,…)
http://www.siemens.com/industrial-controls/catalogs

Industry Mall (Online ordering system)
https://mall.industry.siemens.com/mall/en/en/Catalog/product?mlfb=3SU1900-0BG16-0SA0

Cax online generator
http://support.automation.siemens.com/WW/CAXorder/default.aspx?lang=en&mlfb=3SU1900-0BG16-0SA0

Service&Support (Manuals, Certificates, Characteristics, FAQs,...)
https://support.industry.siemens.com/cs/ww/en/ps/3SU1900-0BG16-0SA0

Image database (product images, 2D dimension drawings, 3D models, device circuit diagrams, EPLAN macros, ...)
http://www.automation.siemens.com/bilddb/cax_de.aspx?mlfb=3SU1900-0BG16-0SA0&lang=en

Subject to change without notice
© Copyright Siemens

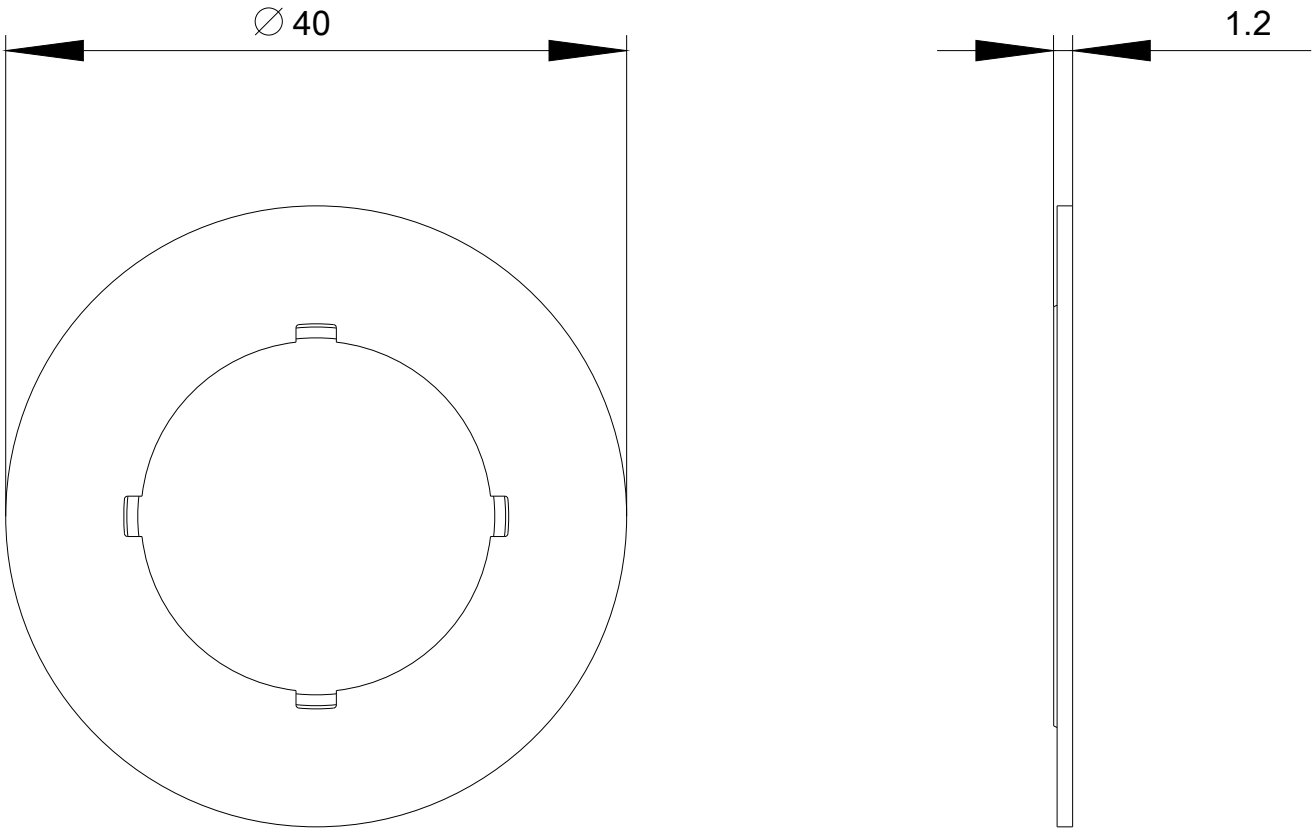

last modified: 06/20/2017

Subject to change without notice
© Copyright Siemens