Thermal overload relays TI 16C, TI 25C, TI 30C for contactors CI 6 – CI 30

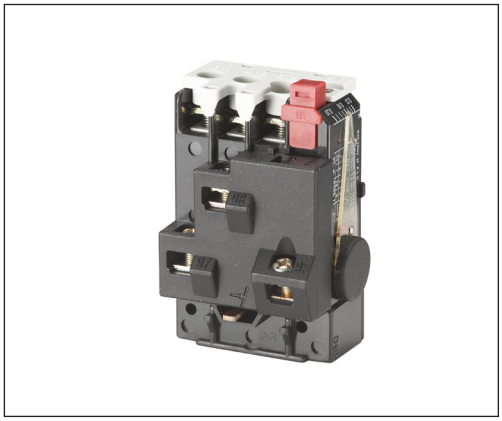

Thermal overload relays TI 16C, TI 25C and TI 30C are used with contactors CI 6 – CI 30 to give protection of squirrel-cage motors of 0.09 kW to 15 kW.
The relays have single-phase protection, i.e. accelerated release if phase drop-out occurs. This is particularly important for motors with delta-connected windings.

Other features of TI 16C/25C/30C:
- stop/reset button
- manual/automatic reset
- test button
- double scale for direct start or Y/D start
- galvanically isolated signal contact

Type	Range		Max. fuse[1]				HRC[2] II	Code no.
	Motor-starter [A]	Y/D-starter [A]	gI, gL, gG		BS 88, type T			
			Type 1 [A]	Type 2 [A]	Type 1 [A]	Type 2 [A]	[A]	
TI 16C	0.13 – 0.20	–	25	–	32	–	1	**047H0200**
	0.19 – 0.29	–	25	–	32	2	1	**047H0201**
	0.27 – 0.42	–	25	2	32	2	1	**047H0202**
	0.4 – 0.62	–	25	2	32	4	1	**047H0203**
	0.6 – 0.92	–	25	4	32	6	3	**047H0204**
	0.85 – 1.3	–	25	4	32	6	3	**047H0205**
	1.2 – 1.9	–	25	6	32	10	6	**047H0206**
	1.8 – 2.8	3.2 – 4.8	25	6	32	10	15	**047H0207**
	2.7 – 4.2	4.7 – 7.3	25	16	32	20	15	**047H0208**
	4.0 – 6.2	6.9 – 10.7	35	20	40	25	15	**047H0209**
	6.0 – 9.2	10 – 16	50	20	50	25	35	**047H0210**
	8.0 – 12	13 – 20.8	63	25	63	32	35	**047H0211**
	11 – 16	19 – 27	80	25	80	32	50	**047H0212**
TI 25C	15 – 20	26 – 35	80	35[3]	80	40	60	**047H0213**
	19 – 25	33 – 43	80	63	80	63	60	**047H0214**
TI 30C	24 – 32	41 – 55	80	63	80	63	60	**047H0215**

1) To IEC 947-4 coordination types 1 and 2:
Coordination type 1: Any type of damage to the motor starter is permissible. If the motor starter is in an enclosure, no external damage to the enclosure is permissible. After a short-circuit the thermal overload relay shall be partially or wholly replaced.
Coordination type 2: No damage to the motor starter is permissible, but slight contact burning and welding is permissible.
2) In accordance with HRC form II, TI 16C, TI 25C and TI 30C are suitable for operation in Canada and the USA.
3) 50 A in Norway.

Selection of thermal overload relay
The selection of a thermal overload relay must be based on the motor full load current and the method of starting:
- With direct start the range for motor starter is used.
- With star-delta start the range for Y/D starter is used.

Example:
Full load current: 16 A
- With direct start, the suitable motor starter range is 11 – 16 A, i.e. thermal overload relay **047H0212.**
- With star-delta start, the suitable Y/D starter range is 10 – 16 A, i.e. thermal overload relay **047H0210**.
  The range 13 – 20.8 A could also be used, but thermal overload relay 047H0211 will not release as quickly if one phase drops out.

Thermal overload relays TI 80



Thermal overload relays TI 80 are used with contactors CI 32 – 50 to give protection of squirrel-cage motors of 7.5 kW to 25 kW.
The relays have single-phase protection, i.e. accelerated release if phase drop-out occurs. This is particularly important for motors with delta-connected windings.

Other features of TI 80:
- stop/reset button
- manual/automatic reset
- test button
- double scale for direct start or Y/D start
- signal contact with changeover

Type	Range		Max. fuse[1)]				Code no.
	Motor-starter [A]	Y/D-starter [A]	gl, gL, gG		BS 88, type T		
			Type 1 [A]	Type 2 [A]	Type 1 [A]	Type 2 [A]	
TI 80	16 – 23	28 – 40	125	63	125	63	**047H1013**
	22 – 32	38 – 56	125	63	125	63	**047H1014**
	30 – 45	52 – 78	125	100	125	100	**047H1015**
	42 – 63	75 – 109	–	100	–	125	**047H1016**

1) To IEC 947-4 coordination types 1 and 2:
Coordination type 1: Any type of damage to the motor starter is permissible. If the motor starter is in an enclosure, no external damage to the enclosure is permissible. After a short-circuit the thermal overload relay shall be partially or wholly replaced.
Coordination type 2: No damage to the motor starter is permissible, but slight contact burning and welding is permissible.

Selection of thermal overload relay
The selection of a thermal overload relay must be based on the motor full load current and the method of starting:
- With direct start the range for motor starter is used.
- With star-delta start the range for Y/D starter is used.

Example:
Full load current: 45 A
- With direct start, the suitable motor starter range is 30 – 45 A, i.e. thermal overload relay **047H1015.**
- With star-delta start, the suitable Y/D starter range is 38 – 56 A, i.e. thermal overload relay **047H1014**.

Accessories for thermal overload relays TI 16C - 30C

Type	Description	Comments	Code no.
	Clip-on marker	For thermal overload relays TI 16C, 25C and 30C (250-off)	**037H010566**
	Holder for sep. mounting	Mounting of thermal overload relays TI 16C, 25C and 30C on 35 mm DIN rail	**047H016566**
	Base for TI 16C	Separate mounting of thermal overload relays TI 16C	**047L040566**
	Base for TI 80	Separate mounting of thermal overload relays TI 80 (20-off)	**047L045666**
	Stop-pushbutton extension	For thermal overload relays TI 16C-80 (3 mm)	**047L040666**
	Current rail set	For direct mounting of thermal overload relay TI 80 on contactors	**037H010866**

Enclosures for the CI range up to 30 A



Enclosures for the CI range up to 30 A are made of plastic and offer a very high degree of enclosure (IP 55 to IEC 529).
They are fitted with a DIN rail and there is ample space for a timer block (ETB) at the side of the contactor. There is an earth terminal and a loop terminal in the bottom of the enclosure. There are versions with four knockouts for M20/25 cable entries.

Enclosure BCI and BCI 1: Up to four auxilliary contact blocks can be fitted on each contactor.
Box BCI 2: Ub addition to the start contact, two auxiliary contact blocks can be fitted to a three-pole contactor.

Plastic enclosures for motor starters up to 30 A (IP 55)

Type	Application	Pushbuttons	Knockouts	Code no.
BCI	Control relay/Contactor	None	4 M 20/4 M 25	**047B010666**
BCI 1	Motor starter	Stop/reset	4 M 20/4 M 25	**047B010466**
BCI 2	Motor starter	Start-Stop/reset	4 M 20/4 M 25	**047B010266**

Ordering of motor starter components
DOL starters (contactors CI 6 – CI 30 + thermal overload relays TI 16C – TI 30C + enclosure) 3 x 380-415 V

Motor[3]		Thermal overload relay			Contactor		Max. fuse[1]		Enclosure				Start contact	
Output	Fulload current	Range					gI, gL, gG Type 2	gI, gL gG Type 1	with stop-reset		with start-stop/reset		Necessary only with start-stop/reset	
[kW]	[A]	[A]	Type	Code no.	Type	Code no.[4]	[A]	[A]	Type	Code no.	Type	Code no	Type	Code no
0.09	0.35	0.27 – 0.42	TI 16C	**047H0202**	CI 6	**037H0015**	2	25	BCI 1	**047B010466**	BCI 2	**047B010266**	CB-S	**037H0110**
0.12	0.46	0.4 – 0.62	TI 16C	**047H0203**	CI 6	**037H0015**	2	25	BCI 1	**047B010466**	BCI 2	**047B010266**	CB-S	**037H0110**
0.18	0.62	0.4 – 0.62	TI 16C	**047H0203**	CI 6	**037H0015**	2	25	BCI 1	**047B010466**	BCI 2	**047B010266**	CB-S	**037H0110**
0.25	0.82	0.6 – 0.92	TI 16C	**047H0204**	CI 6	**037H0015**	4	25	BCI 1	**047B010466**	BCI 2	**047B010266**	CB-S	**037H0110**
0.37	1.3	0.85 – 1.3	TI 16C	**047H0205**	CI 6	**037H0015**	4	25	BCI 1	**047B010466**	BCI 2	**047B010266**	CB-S	**037H0110**
0.55	1.7	1.2 – 1.9	TI 16C	**047H0206**	CI 6	**037H0015**	6	25	BCI 1	**047B010466**	BCI 2	**047B010266**	CB-S	**037H0110**
0.75	2.1	1.8 – 2.8	TI 16C	**047H0207**	CI 6	**037H0015**	6	25	BCI 1	**047B010466**	BCI 2	**047B010266**	CB-S	**037H0110**
1.1	2.9	2.7 – 4.2	TI 16C	**047H0208**	CI 6	**037H0015**	16	25	BCI 1	**047B010466**	BCI 2	**047B010266**	CB-S	**037H0110**
1.5	3.7	2.7 – 4.2	TI 16C	**047H0208**	CI 6	**037H0015**	16	25	BCI 1	**047B010466**	BCI 2	**047B010266**	CB-S	**037H0110**
2.2	5.3	4.0 – 6.2	TI 16C	**047H0209**	CI 6	**037H0015**	20	35	BCI 1	**047B010466**	BCI 2	**047B010266**	CB-S	**037H0110**
3	7.0	6.0 – 9.2	TI 16C	**047H0210**	CI 9	**037H0021**	20	50	BCI 1	**047B010466**	BCI 2	**047B010266**	CB-S	**037H0110**
4	9.0	6.0 – 9.2	TI 16C	**047H0210**	CI 9	**037H0021**	20	50	BCI 1	**047B010466**	BCI 2	**047B010266**	CB-S	**037H0110**
5.5	12	8.0 – 12	TI 16C	**047H0211**	CI 12	**037H0031**	25	63	BCI 1	**047B010466**	BCI 2	**047B010266**	CB-S	**037H0110**
7.5	16	11 – 16	TI 16C	**047H0212**	CI 16	**037H0041**	25	80	BCI 1	**047B010466**	BCI 2	**047B010266**	CB-S	**037H0110**
10	20	15 – 20	TI 25C	**047H0213**	CI 20	**037H0045**	35[2]	80	BCI 1	**047B010466**	BCI 2	**047B010266**	CB-S	**037H0110**
11	22	19 – 25	TI 25C	**047H0214**	CI 25	**037H0051**	63[2]	80	BCI 1	**047B010466**	BCI 2	**047B010266**	CB-S	**037H0110**
15	32	24 – 32	TI 30C	**047H0215**	CI 30	**037H0055**	63[2]	80	BCI 1	**047B010466**	BCI 2	**047B010266**	CB-S	**037H0110**

[1] To IEC 60947-4 coordination types 1 and 2:
Coordination type 1: Any type of damage to the motor starter is permissible. If the motor starter is in an enclosure, no external damage to the enclosure is permissible. After a short-circuit the thermal overload relay shall be partially or wholly replaced.
Coordination type 2: No damage to the motor starter is permissible, but slight contact burning and welding is permissible.
[2] 50 A in Norway
[3] For each application, check full load current and start current of motor concerned.
[4] State the required coil voltage and frequency by suffix no.

Thermal overload relays



Type	Range Motor starter [A]	Code no.
TI 16C	0.13 – 0.20	**047H0200**
	0.19 – 0.29	**047H0201**
	0.27 – 0.42	**047H0202**
	0.4 – 0.62	**047H0203**
	0.6 – 0.92	**047H0204**
	0.85 – 1.3	**047H0205**
	1.2 – 1.9	**047H0206**
	1.8 – 2.8	**047H0207**
	2.7 – 4.2	**047H0208**
	4.0 – 6.2	**047H0209**
	6.0 – 9.2	**047H0210**
	8.0 – 12	**047H0211**
	11 – 16	**047H0212**
TI 25C	15 – 20	**047H0213**
	19 – 25	**047H0214**
TI 30C	24 – 32	**047H0215**

Construction standards

Contactors, thermal overload relays and accessories are designed and tested in accordance with IEC 60947-4-1/EN 60947-4-1.

Environment
Temperate climate
Tested and passed in accordance with DIN 50 016 and 40 046 part 38 and IEC 68
Max. installation height: 2000 NN, in accordance with IEC 60947-4-1

Pulse voltage

Type	U_{imp} [kV]
CI 6 – CI 15	8
CI 16 – CI 30	8
CI 32 – CI 50	8
CI 9 DC	8
CI 9 EI – CI 30 EI	8

Ambient temperature

Type	Ambient temperature	
	Operation [°C]	Storage/Transport [°C]
CI 6 – CI 50	-30 – 70	-30 – 70
CI 9 DC – CI 30 DC	-40 – 80	-40 – 80
CI 9 EI – CI 30 EI	-30 – 60	-40 – 80

Vibration and shock Tested and passed in accordance with IEC 68-2-6 and IEC 68-2-7

Type	Vibration[1)]	Shock[2)]
CI 6 – CI 15	4 g, 10 – 200 Hz	9 g in 11 ms
CI 16 – CI 30	4 g, 10 – 200 Hz	9 g in 11 ms
CI 32 – CI 50	1 g, 5 – 1000 Hz	6 g in 11 ms
CI 9 DC – CI 30 DC	4 g, 5 – 200 Hz	10 g in 10 ms
CI 9 EI – CI 30 EI	4 g, 5 – 200 Hz	10 g in 10 ms

1) Operating conditions: All directions with de-energized coil.
2) Operating conditions: Parallel with armature and with de-energized coil

Environment

Type	Temperature compensated [°C]	Ambient temperature [°C]	Vibration	Shock perpendicular to contact system	Max. operations per hour
TI 16C	-5 – 40	-50 – 60	2 g at 200 Hz	9 g for 7.5 ms	30
TI 25C	-5 – 40	-50 – 60	2 g at 200 Hz	9 g for 7.5 ms	30
TI 30C	-5 – 40	-50 – 60	2 g at 200 Hz	9 g for 7.5 ms	30
TI 80	-5 – 40	-50 – 60	2 g at 200 Hz	9 g for 7.5 ms	30

Electromagnetic compatibility

Type	Emission	Immunity
CI 9 DC – CI 30 DC	EN 50081-1	EN 50082-2
CI 9 EI – CI 30 EI	EN 50081-1	EN 50082-2

Mounting direction

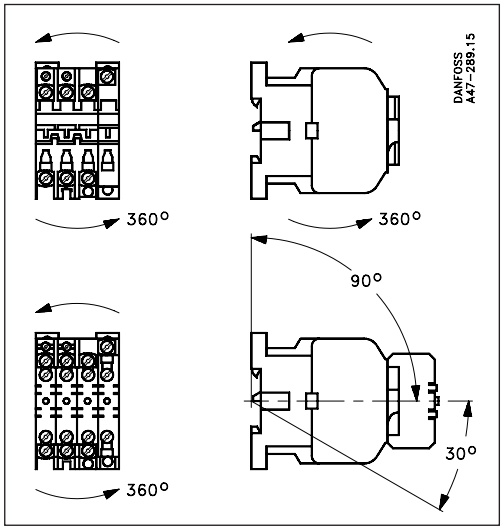

Rated life

Type	Mechanical life Operations	Electrical life AC-3 load Operations	Switching per hour AC-3 load Operations
CI 6 – CI 30	10 x 10^6	1 x 10^6	1200
CI 32	5 x 10^6	1 x 10^6	300
CI 37 – CI 50	5 x 10^6	0.5 x 10^6	300

Approvals & Certificates

Type	Approval authority			
	CE marked in accordance with LVD 2014/35/EU	cULus	EAC	LLC CDC TYSK
CI 6	●	●	●	●
CI 9	●	●	●	●
CI 12	●	●	●	●
CI 15	●	●	●	●
CI 16	●	●	●	●
CI 20	●	●	●	●
CI 25	●	●	●	●
CI 30	●	●	●	●
CI 32	●	●	●	●
CI 37	●	●	●	●
CI 45	●	●	●	●
CI 50	●	●	●	●
TI 16C/25C/30C	●	●	●	●
TI 80	●	●	●	●
CB-	●	●	●	☐
ETB	●	☐	✓	☐
CI 9DC – CI 30 DC	●	●	●	☐
CI 9EI – CI 30 EI	●	●	●	☐

● Approved

☐ No approval applied

Tripping graphs

TI16C, TI 25C, TI 30C

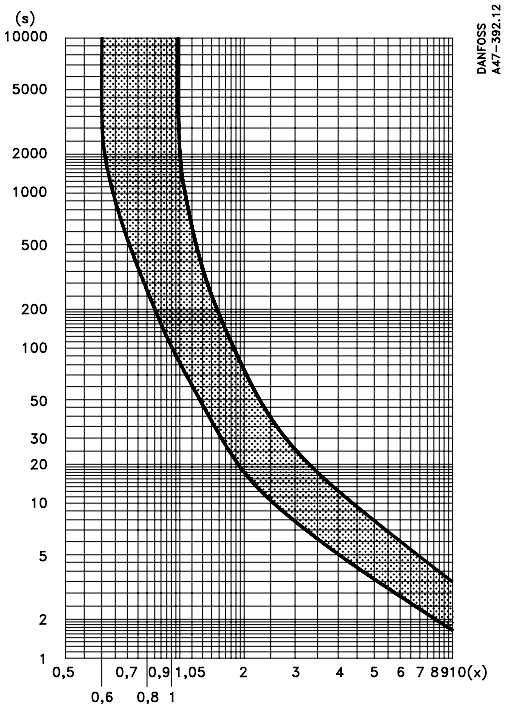

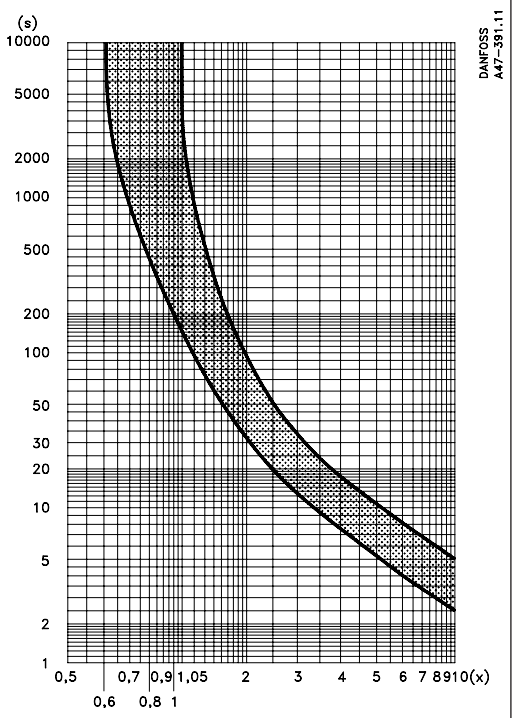

Explanation of graphs
Mean value curves
Upper curve:3-phase tripping and asymmetric load tripping at min. setting.
Lower curve: Asymmetric load tripping at max. setting.

When tripping from the operationally warm condition, the tripping times are approx. 30% of the values shown. These values apply at an ambient temperature = 20 °C.

3-phase tripping: x = measured current / rated motor current

Asymmetric load tripping: x = measured current / max. scale value on overload relay

3-phase overload

1) Measure overload current
2) Find the overload factor (x) by dividing the measured value by the set value of the thermal overload relay (motor full load current).
3) Find (x) on the horizontal axis and follow a line vertically up until it intersects the upper curve.
4) From the intersection point, follow a horizontal line to the left and read off on the vertical axis the time that will elapse before the thermal overload relay cuts out the motor.

Asymmetric load tripping

1) Measure the current the motor draws from one of the intact phases.
2) Find the overload factor (x) by dividing the measured value by the maximum scale value of the thermal overload relay.
3) Find (x) on the horizontal axis and follow a line vertically up until it intersects the lower curve.
4) From the intersection point, follow a horizontal line to the left and read off on the vertical axis the time that will elapse before the thermal overload relay switch off the motor.

Power loss

Contact resistance and power losses

Type	Typical impedance pr pole [mΩ]	Power losses all 3 poles AC-3 [W]	Power losses all 3 poles AC-1 [W]	Coil consumption a.c. [W]	Total power losses AC-3 [W]	Total power losses AC-1 [W]
CI 6	2.1	0.2	2.5	2.7	2.9	5.2
CI 9	1.8	0.4	3.4	2.7	3.1	6.1
CI 12	1.6	0.7	3.0	2.7	3.4	5.7
CI 15	1.6	1.1	3.0	2.7	3.8	5.7
CI 16	1.1	0.8	5.3	2.7	3.5	8
CI 20	1.1	1.3	5.3	2.7	4	8
CI 25	1.1	2.1	5.3	2.7	4.8	8
CI 30	0.8	2.2	3.8	2.7	4.9	6.5
CI 32	0.9	2.8	11	3	5.8	14
CI 37	0.8	3.3	15	3	6.3	18
CI 45	0.8	4.9	15	3	7.9	18
CI 50	0.8	6.0	15	3	9	18
CI 9DC	1.8	0.4	3.4	1.5	1.9	5.3
CI 15DC	1.6	1.1	3	1.5	2.6	4.5
CI 25DC	1.1	2.1	5.3	1.5	3.6	6.8
CI 30DC	0.8	2.2	3.8	1.5	3.7	5.3
CI 9EI	1.8	0.4	3.4	1.5	1.9	5.3
CI 15EI	1.6	1.1	3	1.5	2.6	4.5
CI 25EI	1.1	2.1	5.3	1.5	3.6	6.8
CI 30EI	0.8	2.2	3.8	1.5	3.7	5.3

Type	Average power Min. setting	Average power Max. setting
TI 16C	Typically 2.15 W	Typically 4.87 W
TI 25C	Typically 2.15 W	Typically 4.87 W
TI 30C	Typically 2.15 W	Typically 4.87 W
TI 80	Typically 5.17 W	Typically 10.8 W

Short time withstand current I_{cw}

Type	Current transfer time in sec. 0.2	1	2	4	10	100	1000	Min. cooling in min.
	Short time withstand current in Amps (I_{CW})							
CI 6, CI 9, CI 12, CI 15	550	250	200	160	120	60	40	3
CI 9 EI, CI 15 EI	550	250	200	160	120	60	40	3
CI 9 DC, CI 15 DC	550	250	200	160	120	60	40	3
CI 16, CI 20, CI 25, CI 30	1000	700	500	360	240	110	80	6
CI 25 EI, CI 30 EI	1000	700	500	360	240	110	80	6
CI 25 DC, CI 30 DC	1000	700	500	360	240	110	80	6
CI 32	–	1000	800	580	380	200	100	12
CI 37, CI 45, CI 50	–	1300	1000	900	580	240	120	12

Connections, auxiliary contacts

Type	Connection method	Single core [mm²]	Multi core		Tightening torque [Nm]
			without terminal sleeve [mm²]	with terminal sleeve [mm²]	
CB- for CI 6 – CI 50	Screw and clamp washer	0.75 – 2.5	0.75 – 2.5	0.75 – 1.5	1 – 1.5
TI 16C, TI 25C, TI 30C, TI 80	Screw and clamp washer	0.75 – 1.5	0.75 – 1.5	0.5 –1.5	0.3 – 1

Coils, consumption and operating times

Type	Inrush power			Holding power			Pull-in voltage		Drop-out voltage		Make time		Break time	
	AC		DC	AC		DC	AC	DC	AC	DC	AC	DC	AC	DC
	VA	W	W	VA	W	W	V	V	V	V	ms	ms	ms	ms
CI 6 – CI 30	75	65		9	2.7		(0.85 – 1.1) × U_s		(0.35 – 0.65) × U_s		10 – 17		8 – 10	
CI 32 – CI 50	140	80		11	3		(0.85 – 1.1) × U_s		(0.35 – 0.65) × U_s		9 – 16		7 – 13	
CI 9DC – CI 30DC			65			1.5		0.7-1.33		0.4-0.55		12 – 18		80 – 120
CI 9 EI – CI 30 EI	50	65	3.5 mA	2.8	1.5	3.5 mA	(0.75 – 1.1) × U_s	(0.6 – 1.2)× U_s	(0.4 – 0.55) × U_s	(0.3 – 0.5) × U_s		12 – 18		10 – 16

RC Element (charge suppressor)

Type	Comments	Overvoltage factor $n = \frac{U_{max}}{U_n}$
RC	Suitable for contactors CI 6 – CI 30	1 – 1.5
RCB	Suitable for contactors CI 32 – CI 50	1 – 2.0

Max. load control circuit (contact system)

Type	Load		Max fuse	
	AC-15	DC-13	gI, gL, gG	BS 88 type T
TI 16C TI 25C TI 30C	500 V 2 A 200 VA	250 V 2 A 20 W	4 A	6 A
TI 80	500 V 2 A 200 VA	250 V 2 A 20 W	4 A	6 A

UL/CSA specifications
UL/CSA approved loads

Type	Motor load (AC-3) [hp]						Other loads (AC-1) [A]			
	1-phase		3-phase				UL		CSA	
	115 V	230 V	200 V	240 V	460 V	575 V	40 °C[1)]	60°C[1)]	40 °C[1)]	60 °C[1)]
CI 6	0.5	1	1.5	2	3	5	16	16	20	20
CI 9	0.5	1.5	2	3	5	7.5	16	16	20	20
CI 12	0.75	2	3	4	7.5	10	20	20	20	20
CI 15	1	3	3	5	10	10	25	25	25	25
CI 16	1	3	5	5	10	15	40	40	40	40
CI 20	1.5	3	5	5	10	15	40	40	40	40
CI 25	2	4	7.5	7.5	15	20	40	40	40	40
CI 30	2	5	10	10	20	20	40	40	40	40
CI 32	3	5	10	10	20	25	70	63	70	63
CI 37	3	7.5	15	15	25	30	80	70	80	70
CI 45	4	7.5	15	15	30	30	80	70	80	70
CI 50	5	10	15	15	30	40	80	70	80	70

[1)] 40 °C is defined as non-enclosed installation
60 °C is defined as enclosed installation

Auxiliary contacts, UL/CSA-approved loads

Type	Comments	Load capacity	
		AC	
		Category	VA
CB-	For contactors CI 6..CI 50	A600	720

Dimensions
Thermal overload relays
TI 16C – TI 30C

Thermal overload relays for contactors CI 6, 9, 12, 15, 16, 20, 25, 30

Thermal overload relays TI 16C, 25C, 30C

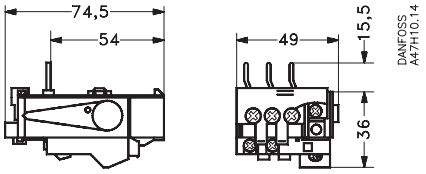

Holder for thermal overload relays TI 16C, 25C, 30C

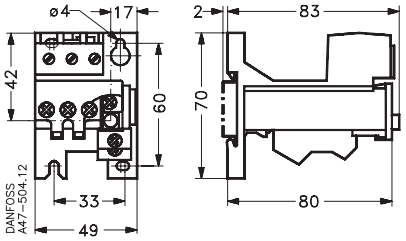

Dimensions
Thermal overload relays
TI 80

Thermal overload relays for contactors CI 32, 37, 45, 50

Thermal overload relay TI 80

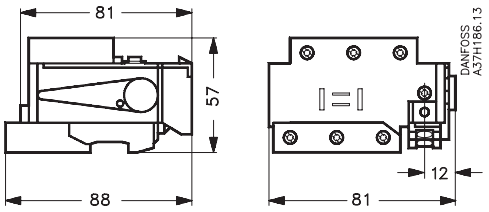

Thermal overload relay TI 80 on base plate

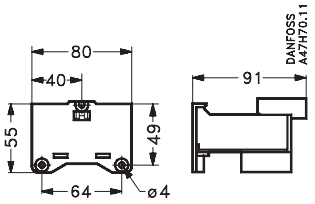

Enclosures

Plastic enclosure BCI, BCI 1, BCI 2
for contactors CI 6, 9, 12, 15, 16, 20, 25, 30

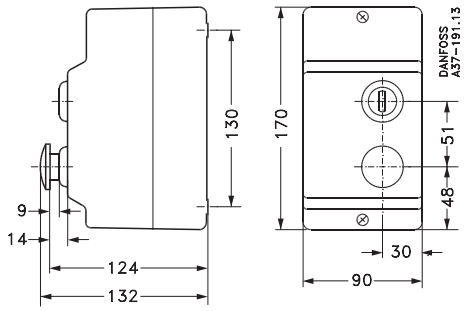

Flush-mounted metal enclosure CITF 2
for contactors CI 6, 9, 12, 15, 16

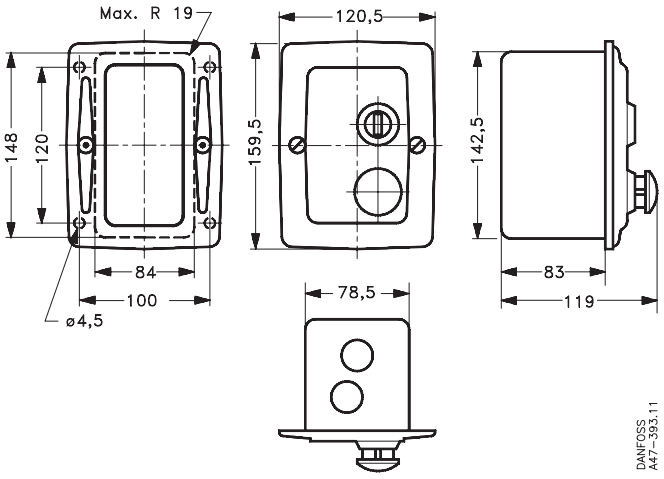

Danfoss can accept no responsibility for possible errors in catalogues, brochures and other printed material. Danfoss reserves the right to alter its products without notice. This also applies to products already on order provided that such alterations can be made without subsequential changes being necessary in specifications already agreed.
All trademarks in this material are property of the respective companies. Danfoss and the Danfoss logotype are trademarks of Danfoss A/S. All rights reserved.