PRODUCT CARD

2018-08-21

AVG01M

**Pole mount. luminaire**



| | |
|---|---|
| Typ | AVG01M |
| GTIN | 6418584151645 |
| Nazwa | Pole mount. luminaire Ensto AVG01M 75W E27 BK |
| Opis | Averia outdoor lighting series provide elegant luminaires for the entire garden area. The range consists of a coherent selection of wall, roof and pole luminaires. The basic materials used are both genuine copper and durable aluminium. |
| Producent | Ensto Lighting Oy |

## Specyfikacje techniczne

### Wymiary

| | |
|---|---|
| **Masa:** | 0.8 kg |
| **Długość:** | 258 mm |
| **Szerokość:** | 258 mm |
| **Wysokość:** | 243 mm |

### Temperatura

| | |
|---|---|
| **Temperatura pracy:** | -25 ... 30 °C |

### Parametry elektryczne

| | |
|---|---|
| **Voltage:** | 230 V |

### Kolor

| | |
|---|---|
| **Kolor:** | Czarny |

### Mechanical

| | |
|---|---|
| **Odporność na udar:** | - |

### Ratings

| | |
|---|---|
| **Stopień ochrony:** | IP44 |
| **Moc:** | 75 W |

Ensto Pol Sp. z o.o.
ul. Starogardzka 17A
83-010 Straszyn
Poland
Email biuro@ensto.com
Tel. +58 692 40 00
www.ensto.com

| | |
|---|---|
| **Protection class:** | I |
| **ETIM 7:** | EC000062 Luminaire for streets and places |

## Oprawy oświetleniowe info

### Luminaire specific information

| | |
|---|---|
| **Control:** | - |
| **Lamp base:** | E27 |
| **Light source qty and power (W):** | 1x75 |
| **Light source (ILCOS):** | IA |
| **Light source:** | A60 |
| **Materials:** | |
| **Optics:** | Glass diffuser and anti-glare lamellas |
| **Installation:** | Column |
| **IN-OUT- looping:** | Ending |
| **Electrical connection, cable size:** | 3x2,5 |
| **Electrical connection, connector type:** | Screw terminal |

## ETIM

### ETIM

| | |
|---|---|
| **With light source:** | false |
| **Control gear included:** | true |
| **Remote control:** | None |
| **Suitable for top end size:** | 50 mm |
| **Adjustable optics:** | false |
| **With wireless control:** | false |
| **Mounting method:** | Post top |
| **With light regulation program control:** | false |
| **Suitable for number of lamps:** | 1 |
| **Material housing:** | Aluminium |
| **Voltage type:** | AC |
| **Material cover:** | Other |
| **Colour housing:** | Black |
| **Degree of protection (IP):** | IP44 |
| **With connection cable:** | false |
| **Protection class:** | I |
| **Constant luminous flux control:** | false |
| **Nominal voltage:** | 230 V |
| **Lamp holder:** | E27 |
| **Type of control gear:** | Not required |

## Opakowanie

### Opakowanie

| | |
|---|---|
| **Size:** | 1 |

| | |
|---|---|
| **Length:** | 255 mm |
| **Width:** | 255 mm |
| **Height:** | 285 mm |
| **Weight (brt):** | 1.1 kg |
| **Volume:** | 18.532125 |

## Pallet package

| | |
|---|---|
| **Size:** | 36 |

Ensto Pol Sp. z o.o.
ul. Starogardzka 17A
83-010 Straszyn
Poland
Email biuro@ensto.com
Tel. +58 692 40 00
www.ensto.com

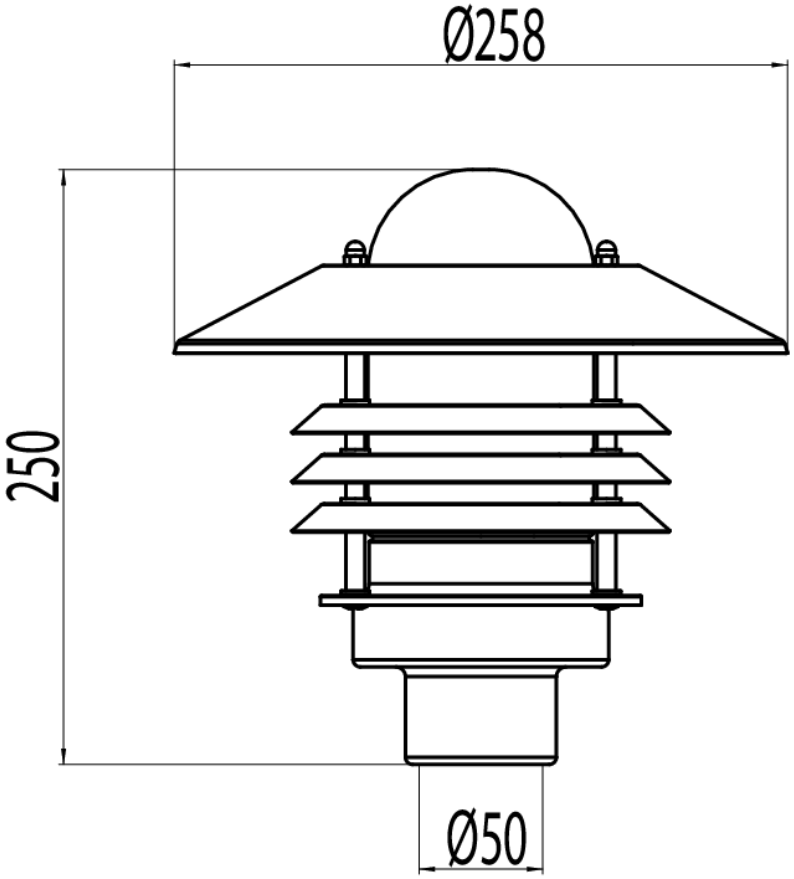


Ensto Pol Sp. z o.o.
ul. Starogardzka 17A
83-010 Straszyn
Poland
Email biuro@ensto.com
Tel. +58 692 40 00
www.ensto.com