PRODUCT CARD

2018-08-22

AVGP03M

Outdoors wall luminaire



Typ	AVGP03M
GTIN	6410045602529
Nazwa	Outdoors wall luminaire Ensto AVGP03M 60W E27 BK
Opis	Averia outdoor lighting series provide elegant luminaires for the entire garden area. The range consists of a coherent selection of wall, roof and pole luminaires. The basic materials used are both genuine copper and durable aluminium.
Producent	Ensto Lighting Oy

Specyfikacje techniczne

Wymiary

Masa:	1.30 kg
Długość:	160 mm
Szerokość:	249 mm
Wysokość:	304 mm

Temperatura

Temperatura pracy:	-25 ... 30 °C

Parametry elektryczne

Voltage:	230 V

Kolor

Kolor:	Czarny

Mechanical

Odporność na udar:	-

Ratings

Stopień ochrony:	IP44
Moc:	60 W

Ensto Pol Sp. z o.o.
ul. Starogardzka 17A
83-010 Straszyn
Poland
Email biuro@ensto.com
Tel. +58 692 40 00
www.ensto.com

Protection class:	I
ETIM 7:	EC002892 Ceiling-/wall luminaire

Oprawy oświetleniowe info

Luminaire specific information

Control:	-
Lamp base:	E27
Light source qty and power (W):	1x60
Light source (ILCOS):	IA
Light source:	A60
Materials:	
Optics:	Glass diffuser and anti-glare lamellas
Installation:	Wall
IN-OUT- looping:	Continous
Electrical connection, cable size:	3x2,5
Electrical connection, connector type:	Pushwire terminal

ETIM

ETIM

With air slots:	false
Nominal voltage:	230 V
Suitable for surface mounting:	true
Colour housing:	Black
Voltage type:	AC
With movement sensor:	false
Height/depth:	304 mm
Control gear included:	true
Length:	160 mm
Light sharing:	Symmetric
Light outlet:	Direct
Suitable for wall mounting:	true
Suitable for built-in mounting:	false
Type of grid:	None
Suitable for emergency lighting:	false
Suitable for light line configuration:	false
Suitable for ceiling mounting:	false
Suitable for suspended mounting:	false
Beam angle:	Open beam/diffuse
Lamp holder:	E27
With light source:	false
Covering of the luminaire with thermally insulating material possible:	true
Luminaire with limited surface temperature, sign "D“:	false
Material housing:	Aluminium

Suitable for number of lamps:	1
Protection class:	I
Width:	249 mm
Type of control gear:	Not required
Degree of protection (IP):	IP44
Fit for monitor workplace acc. EN 12464-1:	false
Material cover:	Other
With light sensor:	false

Opakowanie

Opakowanie

Size:	1
Length:	175 mm
Width:	320 mm
Height:	330 mm
Weight (brt):	1.6 kg
Volume:	18.48

Pallet package

Size:	36

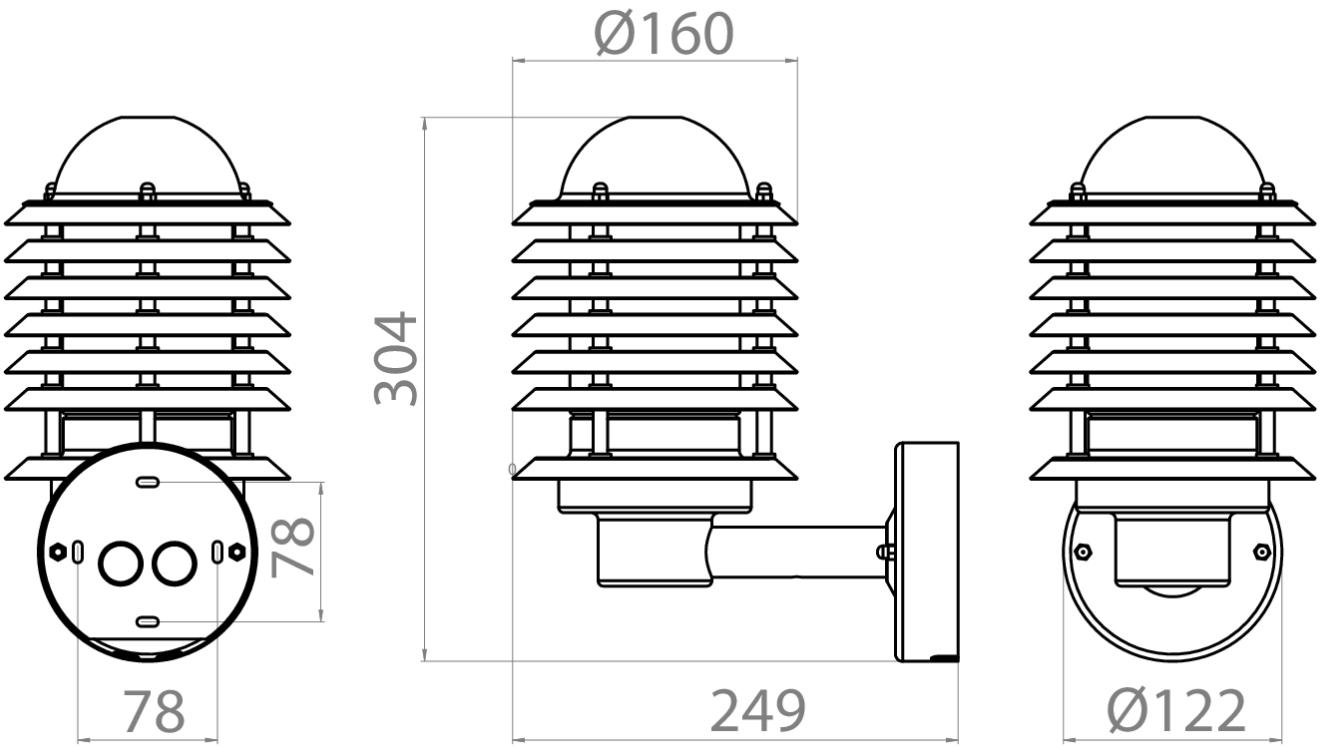

Ensto Pol Sp. z o.o.
ul. Starogardzka 17A
83-010 Straszyn
Poland
Email biuro@ensto.com
Tel. +58 692 40 00
www.ensto.com