MENNEKES
MY POWER CONNECTION

Wall mounted receptacle with TwinCONTACT - Part no. 1720



- screwless spring terminals
- suitable for through wiring
- internal fixing
- 4 p and 5 p receptacles the enclosure can be turned 180°

Technical information	
Ampere	16 A
Poles	3 p
Voltage	230 V
Earth position	6 h
Hertz	50-60 Hz
Connection technology	Screwless - TwinCONTACT
Contact	standard
Protection type	IP 44

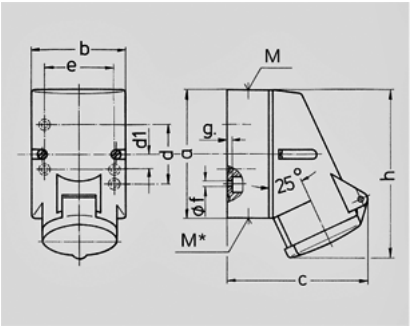

Drawing	Amp.	16		
1 MB 209	Poles	3	4	5
Dim. in mm	a	87	100	100
	b	64	75	75
	c	99	110	113
	d	40	–	–
	d1	–	11	11
	e	50	59	59
	f	4,5	5	5
	g.	4	4	4
	h	115	125	128
	M	20	20	20
	M*	M20 (blind) to be cut out		
Max. cable diam. (mm)		15	15	15
Terminal for cond. cross section (mm^2) min.-max.		1,5 —4	1,5 —4	1,5 —4