SIEMENS

Data sheet 3SU1401-1BB30-1AA0

LED module with integrated LED 24 V AC/DC, yellow, screw terminal, for front plate mounting



Figure similar

Product brand name	SIRIUS ACT
Product designation	LED module
Product type designation	3SU1

General technical data

Product component	
• diode	Yes
• lamp transformer	No
• Light source	Yes
• series resistor	No
Insulation voltage	
• rated value	320 V
Degree of pollution	3
Type of voltage	
• of the operating voltage	AC/DC
• for actuation	AC/DC
Surge voltage resistance rated value	4 kV
Consumed current	

Subject to change without notice
© Copyright Siemens

• maximum	20 mA
Protection class IP	
• of the enclosure	IP40
• of the terminal	IP20
Shock resistance	
• acc. to IEC 60068-2-27	Sinusoidal half-wave 50 g / 11 ms
• for railway applications acc. to DIN EN 61373	Category 1, Class B
Vibration resistance	
• acc. to IEC 60068-2-6	10 ... 500 Hz: 5g
• for railway applications acc. to DIN EN 61373	Category 1, Class B
Operating period typical	100 000 h
Operating voltage 1	
• at AC	
— at 50 Hz rated value	24 V
— at 60 Hz rated value	24 V
• at DC rated value	24 V
Relative positive tolerance of the operating voltage	20 %
Relative negative tolerance of the operating voltage	20 %

Control circuit/ Control

Inrush current maximum	2 A

Connections/Terminals

Type of electrical connection	screw-type terminals
Type of connectable conductor cross-sections	
• solid with core end processing	2x (0.5 ... 0.75 mm²)
• solid without core end processing	2x (1.0 ... 1.5 mm²)
• finely stranded with core end processing	2x (0.5 ... 1.5 mm²)
• finely stranded without core end processing	2x (1,0 ... 1,5 mm²)
• at AWG conductors	2x (18 ... 14)
Tightening torque	
• with screw-type terminals	0.8 ... 0.9 N·m

Lamp

Type of light source	LED
Color of the light source	yellow
Light intensity	900 ... 1 400 mcd
Certificate of suitability	
• ATEX	No
• IECEx	No

Ambient conditions

Ambient temperature	
• during operation	-25 ... +70 °C

Subject to change without notice
© Copyright Siemens

• during storage	-40 ... +80 °C
Environmental category during operation acc. to IEC 60721	3M6, 3S2, 3B2, 3K6 (with relative air humidity of 10 ... 95 %, no condensation in operation permitted)

Installation/ mounting/ dimensions

Mounting type	
• of modules and accessories	Front plate mounting
Height	33.2 mm
Width	9.8 mm
Depth	29.4 mm

Certificates/approvals

General Product Approval				EMC	Declaration of Conformity
CCC	CSA	UL		C-Tick	EG-Konf.

Test Certificates		other
Declaration of the Compliance with the order	Special Test Certi-ficate	Confirmation

Further information

Information- and Downloadcenter (Catalogs, Brochures,…)
http://www.siemens.com/industrial-controls/catalogs

Industry Mall (Online ordering system)
https://mall.industry.siemens.com/mall/en/en/Catalog/product?mlfb=3SU1401-1BB30-1AA0

Cax online generator
http://support.automation.siemens.com/WW/CAXorder/default.aspx?lang=en&mlfb=3SU1401-1BB30-1AA0

Service&Support (Manuals, Certificates, Characteristics, FAQs,...)
https://support.industry.siemens.com/cs/ww/en/ps/3SU1401-1BB30-1AA0

Image database (product images, 2D dimension drawings, 3D models, device circuit diagrams, EPLAN macros, ...)
http://www.automation.siemens.com/bilddb/cax_de.aspx?mlfb=3SU1401-1BB30-1AA0&lang=en

Subject to change without notice
© Copyright Siemens

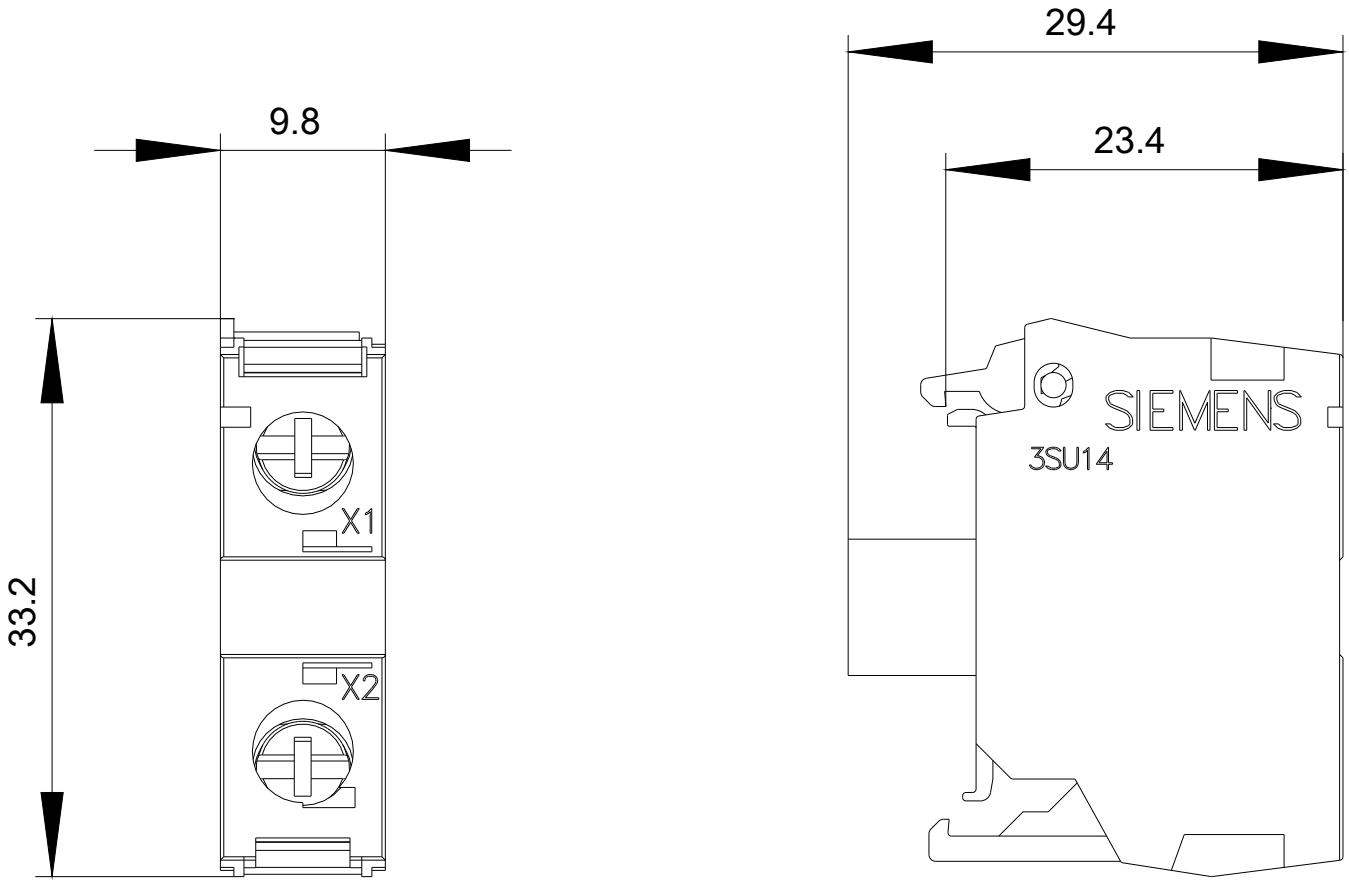

Subject to change without notice
© Copyright Siemens

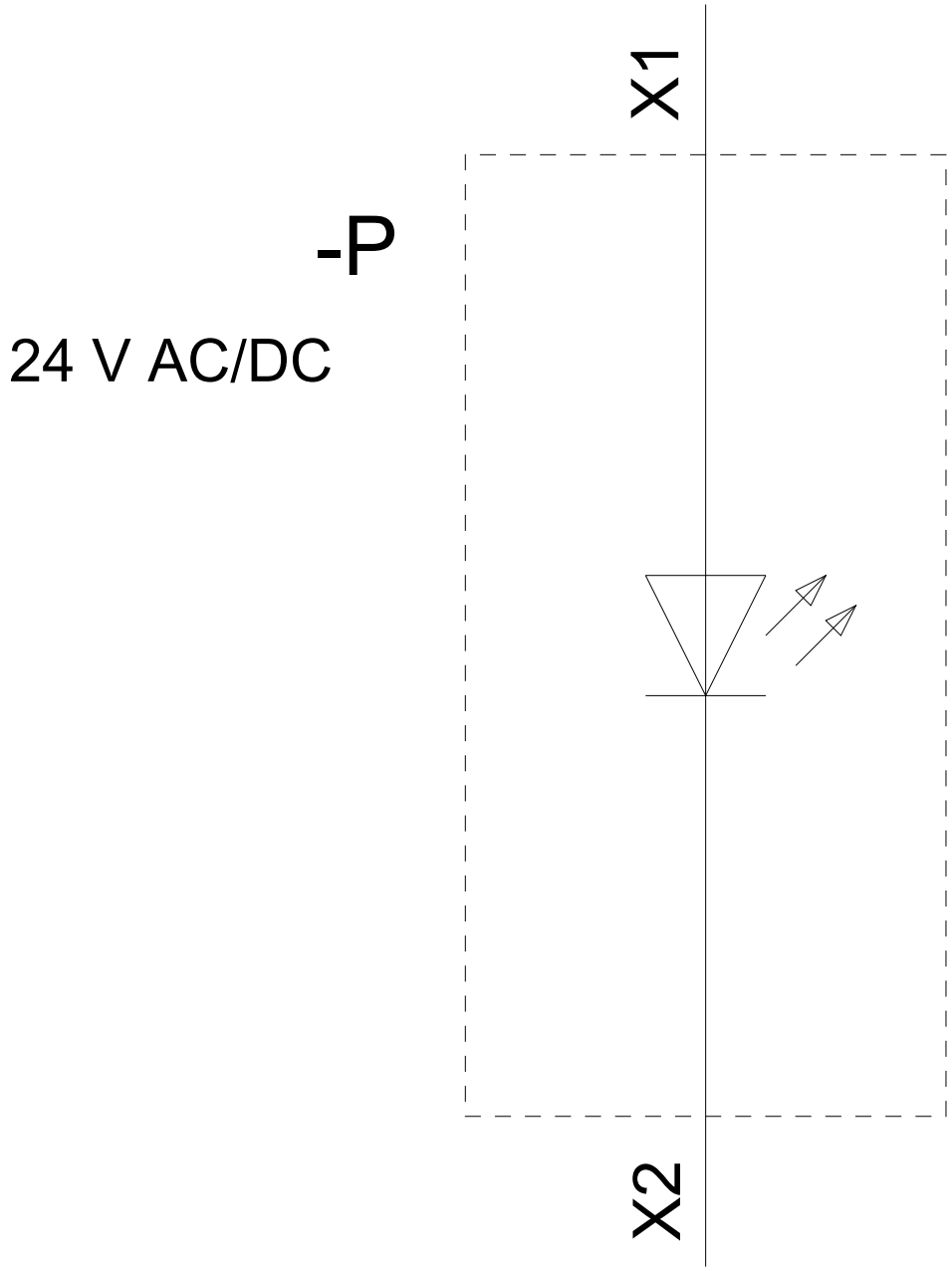

last modified: 10/11/2018

Subject to change without notice
© Copyright Siemens