SIEMENS

Data sheet 4NC5225-2DE21

current transformer 400/5 A 5 VA CL 0.5

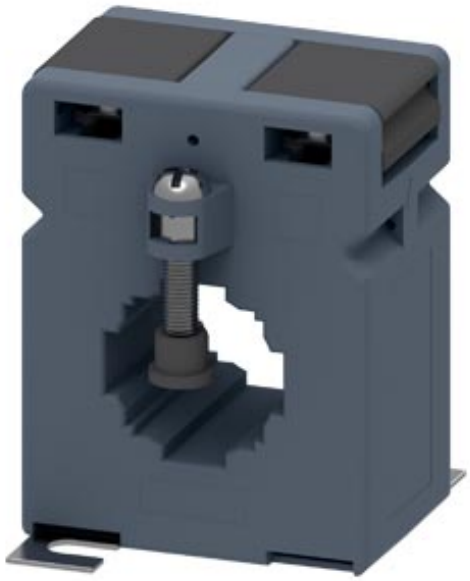

Model	
Product brand name	SENTRON
Product designation	Current transformer
Design of the product	Bushing-type current transformers
Operating apparent output / rated value	5 V·A
Protection class	
Protection class IP	IP20
• Ratio of input current/output current	400/5
• Current / at output / rated value	5 A
• Current / at input / rated value	400 A
Accuracy class / of the current transformer	class 0.5
Product feature / Touch protection	Yes
Connections	
Type of electrical connection / at output	screw-type terminals
Mechanical Design	
Height	78.5 mm
Height of the opening	30 mm
Width	60 mm

Subject to change without notice
© Copyright Siemens

Width	
• of the push-through bus bar / at 1 bus bar / maximum	30 mm
• of the push-through bus bar / in case of 2 bus bars / maximum	30 mm
Depth	65 mm
Mounting type	screw fixing
Outer diameter / of the push-through conductor / maximum	28 mm
Net weight	369 g

Environmental conditions

Ambient temperature	
• during operation / minimum	-30 °C
• during operation / maximum	55 °C

Certificates

Reference code / acc. to DIN EN 61346-2	T

Declaration of Conformity

CE
EG-Konf.

Further information

Information- and Downloadcenter (Catalogs, Brochures,…)
http://www.siemens.com/lowvoltage/catalogs

Industry Mall (Online ordering system)
https://mall.industry.siemens.com/mall/en/en/Catalog/product?mlfb=4NC5225-2DE21

Service&Support (Manuals, Certificates, Characteristics, FAQs,...)
https://support.industry.siemens.com/cs/ww/en/ps/4NC5225-2DE21

Image database (product images, 2D dimension drawings, 3D models, device circuit diagrams, ...)
http://www.automation.siemens.com/bilddb/cax_en.aspx?mlfb=4NC5225-2DE21

CAx-Online-Generator
http://www.siemens.com/cax

Tender specifications
http://www.siemens.com/specifications

Subject to change without notice
© Copyright Siemens

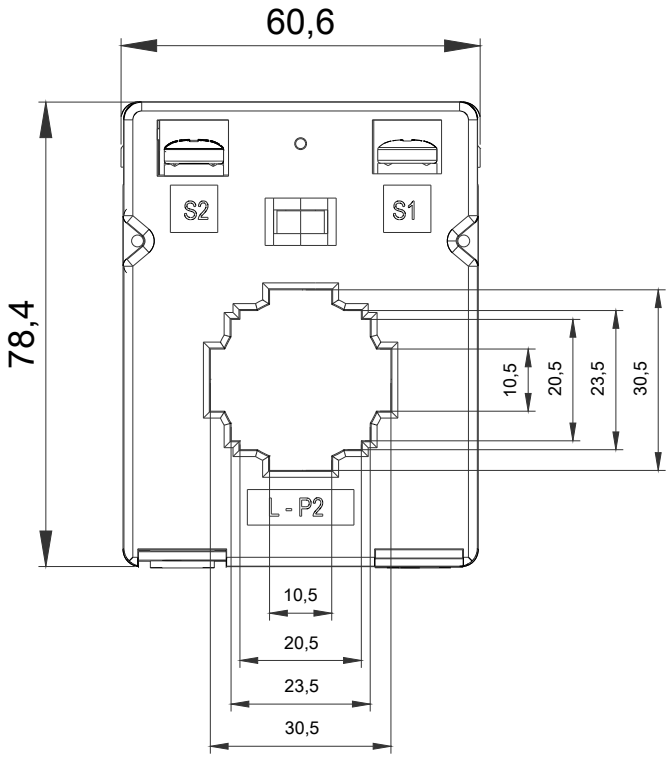

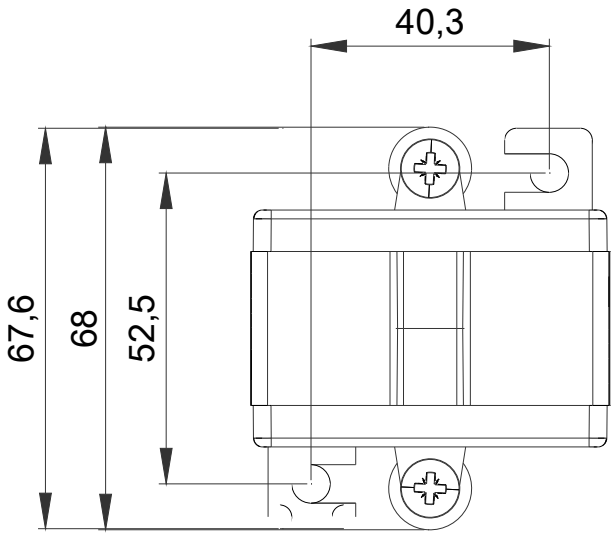

Subject to change without notice
© Copyright Siemens

Subject to change without notice
© Copyright Siemens