SIEMENS

Data sheet BVP:034262

BD01-B UNIVERSAL FIXING BRACKETS

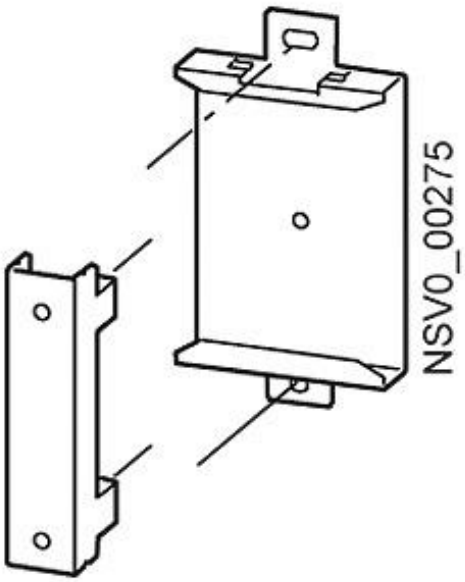

Figure similar

Model	
Product designation	fixing bracket (accessories) for BD01 busbar trunking system

Mechanical Design	
Height	132 mm
Width	27.5 mm
Length	0.075 m
Mounting type	wall / ceiling / suspension

Declaration of Conformity

CE
EG-Konf.

Further information

Information- and Downloadcenter (Catalogs, Brochures,…)
http://www.siemens.com/lowvoltage/catalogs

Subject to change without notice
© Copyright Siemens

Industry Mall (Online ordering system)
https://mall.industry.siemens.com/mall/en/en/Catalog/product?mlfb=BVP:034262

Service&Support (Manuals, Certificates, Characteristics, FAQs,...)
https://support.industry.siemens.com/cs/ww/en/ps/BVP:034262

Image database (product images, 2D dimension drawings, 3D models, device circuit diagrams, ...)
http://www.automation.siemens.com/bilddb/cax_en.aspx?mlfb=BVP:034262

CAx-Online-Generator
http://www.siemens.com/cax

Tender specifications
http://www.siemens.com/specifications

Subject to change without notice
© Copyright Siemens