# GNIAZDA TABLICOWE

skośne 16A, 32A oraz częściowo 63A
z bezśrubową technologią Quick Connect
PN-IEC 60309, EN 60309, VDE 0623
Stopień ochrony IP 44

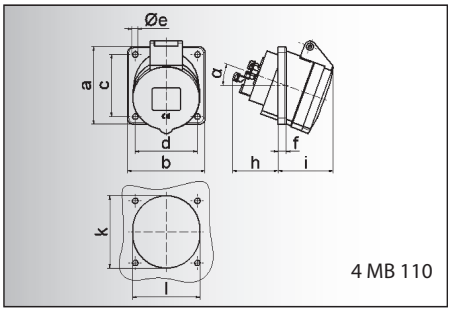

4 MB 110

| Prąd [A] | 16 |
|---|---|
| Bieguny | 5 |
| a | 75,0 |
| b | 75,0 |
| c | 60,0 |
| d | 60,0 |
| e ø | 5,5 |
| f | 8,0 |
| h | 46,0 |
| i | 54,0 |
| k | 70,0 |
| l | 65,0 |
| α | 20° |
| Przewód mm² min | 1,5 |
| Przewód mm² max | 4 |

**Gniazdo tablicowe Quick-Connect**
- Zaciski bezśrubowe
- Skośne 20°
- Kontakty Kontex
- Kołnierz 75 x 75 mm
- Stopień ochrony IP 44

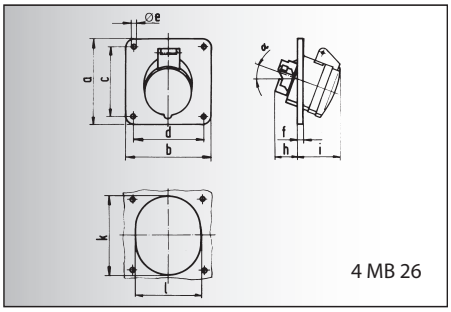

4 MB 26

| Prąd [A] | 16 |
|---|---|
| Bieguny | 5 |
| a | 75,0 |
| b | 75,0 |
| c | 60,0 |
| d | 60,0 |
| e ø | 5,5 |
| f | 8,0 |
| h | 30,0 |
| i | 54,0 |
| k | 70,0 |
| l | 65,0 |
| α | 20° |
| Przewód mm² min | 1,5 |
| Przewód mm² max | 4 |

**Gniazdo tablicowe**
- Zaciski śrubowe
- Skośne 20°
- Kontakty Kontex
- Kołnierz 75 x 75 mm
- Stopień ochrony IP 44

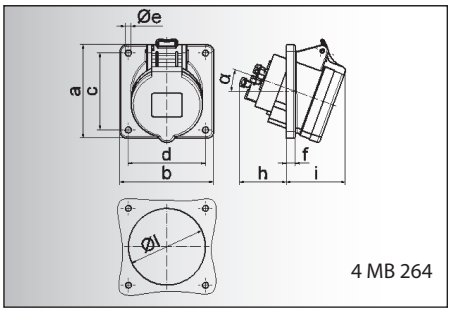

4 MB 264

| Prąd [A] | 16 | 16 | 16 | 32 | 32 | 32 |
|---|---|---|---|---|---|---|
| Bieguny | 3 | 4 | 5 | 3 | 4 | 5 |
| a | 85,0 | 85,0 | 85,0 | 85,0 | 85,0 | 85,0 |
| b | 85,0 | 85,0 | 85,0 | 85,0 | 85,0 | 85,0 |
| c | 70,0 | 70,0 | 70,0 | 70,0 | 70,0 | 70,0 |
| d | 70,0 | 70,0 | 70,0 | 70,0 | 70,0 | 70,0 |
| e ø | 5,5 | 5,5 | 5,5 | 5,5 | 5,5 | 5,5 |
| f | 8,0 | 8,0 | 8,0 | 8,0 | 8,0 | 8,0 |
| h | 46,0 | 46,0 | 46,0 | 61,0 | 61,0 | 61,0 |
| i | 50,0 | 51,0 | 54,0 | 60,0 | 60,0 | 60,0 |
| l ø | 57,0 | 65,0 | 70,0 | 78,0 | 78,0 | 78,0 |
| α | 20° | 20 ° | 20° | 20° | 20° | 20° |
| Przewód mm² min | 1,5 | 1,5 | 1,5 | 2,5 | 2,5 | 2,5 |
| Przewód mm² max | 4 | 4 | 4 | 10 | 10 | 10 |

**Gniazdo tablicowe Quick-Connect**
- Zaciski bezśrubowe
- Skośne 20°
- Kontakty Kontex
- Kołnierz 85 x 85 mm
- Stopień ochrony IP 44

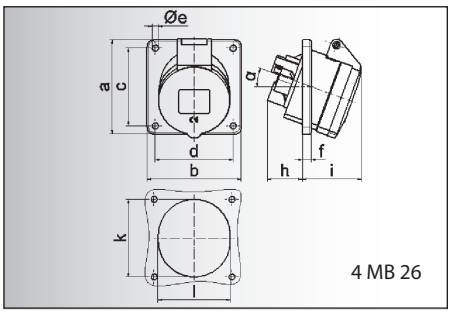

4 MB 26

| Prąd [A] | 16 | 16 | 16 | 32 | 32 | 32 |
|---|---|---|---|---|---|---|
| Bieguny | 3 | 4 | 5 | 3 | 4 | 5 |
| a | 85,0 | 85,0 | 85,0 | 85,0 | 85,0 | 85,0 |
| b | 85,0 | 85,0 | 85,0 | 85,0 | 85,0 | 85,0 |
| c | 70,0 | 70,0 | 70,0 | 70,0 | 70,0 | 70,0 |
| d | 70,0 | 70,0 | 70,0 | 70,0 | 70,0 | 70,0 |
| e ø | 5,5 | 5,5 | 5,5 | 5,5 | 5,5 | 5,5 |
| f | 8,0 | 8,0 | 8,0 | 8,0 | 8,0 | 8,0 |
| h | 30,0 | 30,0 | 30,0 | 50,0 | 50,0 | 34,0 |
| i | 48,0 | 50,0 | 54,0 | 63,0 | 63,0 | 60,0 |
| k | 57,0 | 65,0 | 70,0 | 78,0 | 78,0 | 78,0 |
| l | 57,0 | 65,0 | 70,0 | 78,0 | 78,0 | 78,0 |
| α | 20° | 20 ° | 20° | 20° | 20° | 20° |
| Przewód mm² min | 1,5 | 1,5 | 1,5 | 2,5 | 2,5 | 2,5 |
| Przewód mm² max | 4 | 4 | 4 | 10 | 10 | 10 |

**Gniazdo tablicowe**
- Zaciski śrubowe
- Skośne 20°
- Kołnierz 85 x 85 mm
- Stopień ochrony IP 44

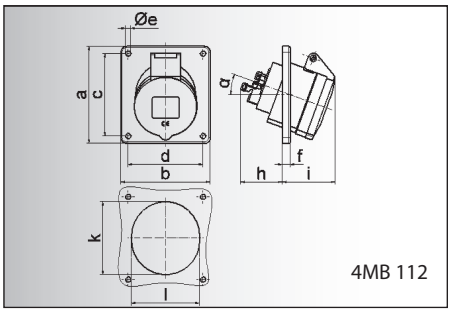

4MB 112

| Prąd [A] | 16 | 16 | 16 | 32 | 32 | 32 |
|---|---|---|---|---|---|---|
| Bieguny | 3 | 4 | 5 | 3 | 4 | 5 |
| a | 74,0 | 100,0 | 100,0 | 100,0 | 100,0 | 100,0 |
| b | 62,0 | 92,0 | 92,0 | 92,0 | 92,0 | 92,0 |
| c | 60,0 | 85,0 | 85,0 | 85,0 | 85,0 | 85,0 |
| d | 52,0 | 77,0 | 77,0 | 77,0 | 77,0 | 77,0 |
| e ø | 5,5 | 5,5 | 5,5 | 5,5 | 5,5 | 5,5 |
| f | 8,0 | 8,0 | 8,0 | 8,0 | 8,0 | 8,0 |
| h | 46,0 | 46,0 | 46,0 | 61,0 | 61,0 | 61,0 |
| i | 48,0 | 50,0 | 55,0 | 68,0 | 68,0 | 60,0 |
| k | 57,0 | 65,0 | 70,0 | 75,0 | 75,0 | 78,0 |
| l | 52,0 | 65,0 | 70,0 | 75,0 | 75,0 | 78,0 |
| α | 20° | 20° | 20° | 20° | 20° | 20° |
| Przewód mm² min | 1,5 | 1,5 | 1,5 | 2,5 | 2,5 | 2,5 |
| Przewód mm² max | 4 | 4 | 4 | 10 | 10 | 10 |

**Gniazdo tablicowe Quick-Connect**
- Zaciski bezśrubowe
- Skośne 20°
- Kontakty Kontex
- Kołnierz 74 x 62 mm przy 16A 3p, 100 x 92 mm przy pozostałych wykonaniach
- Stopień ochrony IP 44

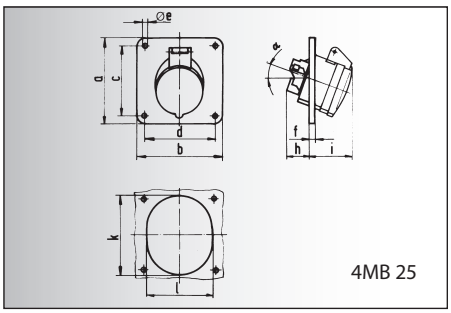

4MB 25

| Prąd [A] | 16 | 16 | 16 | 32 | 32 | 32 |
|---|---|---|---|---|---|---|
| Bieguny | 3 | 4 | 5 | 3 | 4 | 5 |
| a | 74,0 | 100,0 | 100,0 | 100,0 | 100,0 | 100,0 |
| b | 62,0 | 92,0 | 92,0 | 92,0 | 92,0 | 92,0 |
| c | 60,0 | 85,0 | 85,0 | 85,0 | 85,0 | 85,0 |
| d | 52,0 | 77,0 | 77,0 | 77,0 | 77,0 | 77,0 |
| e ø | 5,5 | 5,5 | 5,5 | 5,5 | 5,5 | 5,5 |
| f | 8,0 | 8,0 | 8,0 | 8,0 | 8,0 | 8,0 |
| h | 30,0 | 30,0 | 29,0 | 50,0 | 50,0 | 34,0 |
| i | 48,0 | 50,0 | 55,0 | 68,0 | 68,0 | 60,0 |
| k | 57,0 | 65,0 | 70,0 | 75,0 | 75,0 | 78,0 |
| l | 52,0 | 65,0 | 70,0 | 75,0 | 75,0 | 78,0 |
| α | 20° | 20° | 20° | 20° | 20° | 20° |
| Przewód mm² min | 1,5 | 1,5 | 1,5 | 2,5 | 2,5 | 2,5 |
| Przewód mm² max | 4 | 4 | 4 | 10 | 10 | 10 |

**Gniazdo tablicowe**
- Zaciski śrubowe
- Skośne 20°
- Kontakty Kontex
- Kołnierz 74 x 62 mm przy 16A 3p, 100 x 92 mm przy pozostałych wykonaniach
- Stopień ochrony IP 44

| Liczba biegunów | | 110V 50-60 Hz | 230V 50-60 Hz | 400V 50-60 Hz | 500V 50-60 Hz | 100-300 Hz >50V | 301-500 Hz >50V | | |
|---|---|---|---|---|---|---|---|---|---|
| 2P+E | 3P+E | 3P+N+E | 3pol 4pol 5pol | 3pol 4pol 5pol | 3pol 4pol 5pol | 3pol 4pol 5pol | 3pol 4pol 5pol | 3pol 4pol 5pol | Sztuk | g Szt. |
| Prąd [A] | Bieguny | | 4h 4h 4h | 6h 9h 9h | 9h 6h 6h | 7h 7h 7h | 10h 10h 10h | 2h 2h 2h | | |
| 16 | 5 | | 12 743 | 12 744 | **12 2001** | 12 745 | 12 746 | 12 747 | 10 | 165 |



Rysunek Typ: 12 2001

| | | | | | | | | | |
|---|---|---|---|---|---|---|---|---|---|
| 16 | 5 | 12 10 | 12 11 | **12 12** | 12 319 | 12 192 | 12 507 | 10 | 190 |

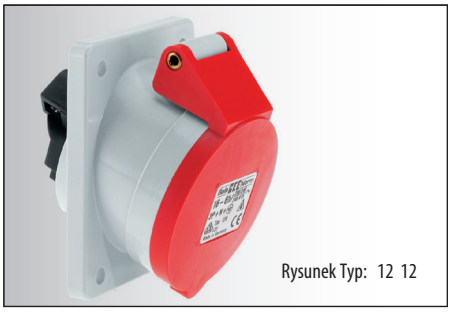
Rysunek Typ: 12 12

| | | | | | | | | | |
|---|---|---|---|---|---|---|---|---|---|
| 16 | 3 | 12 748 | **12 749** | 12 750 | 12 751 | 12 861 | 12 752 | 10 | 135 |
| 16 | 4 | 12 862 | 12 863 | **12 753** | 12 864 | 12 754 | 12 865 | 10 | 155 |
| 16 | 5 | 12 755 | 12 756 | **12 757** | 12 758 | 12 866 | 12 759 | 10 | 175 |
| 32 | 3 | 12 760 | **12 761** | 12 867 | 12 762 | 12 868 | 12 869 | 10 | 215 |
| 32 | 4 | 12 870 | 12 763 | **12 764** | 12 765 | 12 871 | 12 872 | 10 | 235 |
| 32 | 5 | 12 766 | 12 767 | **12 768** | 12 769 | 12 770 | 12 873 | 10 | 250 |



Rysunek Typ: 12 757

| | | | | | | | | | |
|---|---|---|---|---|---|---|---|---|---|
| 16 | 3 | 12 079 | **12 080** | 12 081 | 12 485 | 12 952 | 12 483 | 10 | 150 |
| 16 | 4 | | | **12 500** | 12 520 | | | 10 | 185 |
| 16 | 5 | 12 076 | 12 077 | **12 078** | 12 491 | | 12 848 | 10 | 195 |
| 32 | 3 | 12 324 | **12 310** | | | | | 10 | 210 |
| 32 | 4 | | 12 325 | **12 311** | 12 368 | | | 10 | 230 |
| 32 | 5 | 12 13 | 12 14 | **12 15** | 12 369 | 12 217 | | 10 | 235 |

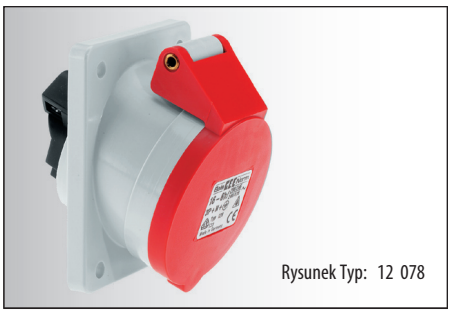
Rysunek Typ: 12 078

| | | | | | | | | | |
|---|---|---|---|---|---|---|---|---|---|
| 16 | 3 | 12 771 | **12 772** | 12 773 | 12 774 | 12 775 | 12 776 | 10 | 120 |
| 16 | 4 | 12 777 | 12 778 | **12 779** | 12 780 | 12 781 | 12 782 | 10 | 175 |
| 16 | 5 | 12 783 | 12 784 | **12 730** | 12 785 | 12 786 | 12 787 | 10 | 195 |
| 32 | 3 | 12 788 | **12 789** | 12 790 | 12 874 | 12 791 | 12 792 | 10 | 230 |
| 32 | 4 | 12 793 | 12 794 | **12 795** | 12 796 | 12 797 | 12 798 | 10 | 250 |
| 32 | 5 | 12799 | 12 800 | **12 801** | 12 802 | 12 803 | 12 804 | 10 | 265 |



Rysunek Typ: 12 730

| | | | | | | | | | |
|---|---|---|---|---|---|---|---|---|---|
| 16 | 3 | 12 16 | **12 17** | 12 18 | 12 037 | 12 199 | 12 148 | 10 | 130 |
| 16 | 4 | 12 19 | 12 20 | **12 21** | 12 22 | 12 23 | 12 24 | 10 | 190 |
| 16 | 5 | 12 25 | 12 26 | **12 27** | 12 022 | 12 316 | 12 197 | 10 | 215 |
| 32 | 3 | 12 28 | **12 29** | 12 30 | | 12 202 | 12 219 | 10 | 250 |
| 32 | 4 | 12 31 | 12 32 | **12 33** | 12 34 | 12 35 | 12 36 | 10 | 260 |
| 32 | 5 | 12 37 | 12 38 | **12 39** | 12 062 | 12 075 | 12 012 | 10 | 265 |


Rysunek Typ: 12 27

dalsze informacje na stronie www.bals.com; www.bals.pl · inne wartości napięć i częstotliwości dostępne na zamówienie