FEATURES & BENEFITS

- -
- -
- -

LOGISTIC DATA

Available packages	10

Insulators with enhanced mechanical and electrical parameters,

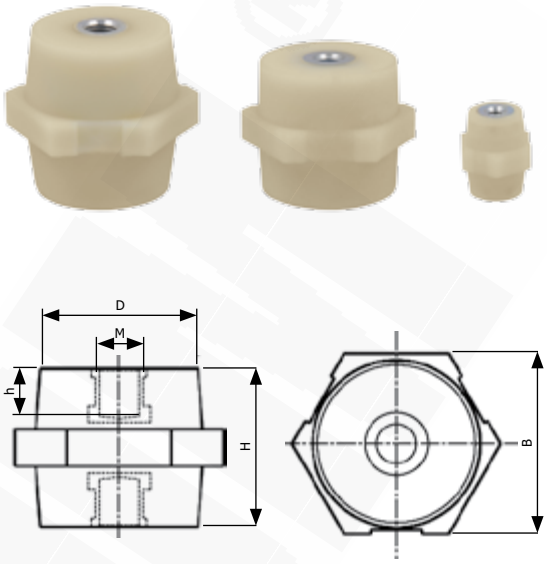

APPLICATION

Busbar supports in switchboards and control boards,

MECHANICAL DATA

Material	Body – nulon reinforced with glass fibre; threaded insert – galvanized steel

ELECTRICAL DATA

Test voltage [kV]	5
Rated voltage [V]	1000

CERTIFICATES & STANDARDS

Standards	PN-E-91062-1, RoHS, halogen free

Type	Index Ergom	Strength [daN] Tension	Strength [daN] flexion	Max. tightening torque [Nm]	Recommended maximum bus width [mm]	B	D	h	H	M	Weights [g]
IWP 20/M4	R32RZ-06020100101	200	100	1,4	25	18	15	5	20	M4	15
IWP 20/M4 (10 SZT./PCS)	R32RZ-06020100103	200	100	1,4	25	18	15	5	20	M4	15
IWP 20/M6	R32RZ-06020100201	200	100	3	25	18	15	5	20	M6	14
IWP 20/M6 (10 SZT./PCS)	R32RZ-06020100203	200	100	3	25	18	15	5	20	M6	14
IWP 25/M5	R32RZ-06020100301	600	160	2,6	25	20	15	6	25	M5	20
IWP 25/M5 (10 SZT./PCS)	R32RZ-06020100303	600	160	2,6	25	20	15	6	25	M5	20
IWP 25/M6	R32RZ-06020100401	600	160	3	25	20	15	6	25	M6	19
IWP 25/M6 (10 SZT./PCS)	R32RZ-06020100403	600	160	3	25	20	15	6	25	M6	19
IWP 30/M6	R32RZ-06020100501	700	300	3	30	30	25	6	30	M6	44
IWP 30/M6 (10 SZT./PCS)	R32RZ-06020100503	700	300	3	30	30	25	6	30	M6	44
IWP 30/M8	R32RZ-06020100601	700	300	6	30	30	25	8	30	M8	41
IWP 30/M8 (10 SZT./PCS)	R32RZ-06020100603	700	300	6	30	30	25	8	30	M8	41
IWP 35/M6	R32RZ-06020100701	1300	800	3	40	40	33	7	35	M6	18
IWP 35/M6 (10 SZT./PCS)	R32RZ-06020100703	1300	800	3	40	40	33	7	35	M6	18
IWP 35/M8	R32RZ-06020100801	1300	800	6	40	40	33	8	35	M8	78
IWP 35/M8 (10 SZT./PCS)	R32RZ-06020100803	1300	800	6	40	40	33	8	35	M8	78
IWP 35/M10	R32RZ-06020100901	1300	800	10	40	40	35	8	35	M10	71
IWP 35/M10 (10 SZT./PCS)	R32RZ-06020100903	1300	800	10	40	40	35	8	35	M10	71
IWP 40/M6	R32RZ-06020101001	1500	800	3	50	45	40	10	40	M6	100
IWP 40/M6 (10 SZT./PCS)	R32RZ-06020101003	1500	800	3	50	45	40	10	40	M6	100

Date of publication: 15/2/2018

Graphic project, pictures and all technical data and descriptions in this catalogue are protected by Polish and international copyright laws. Names and logos used in the content of this catalogue may be trademarks, for which ZAE Ergom Sp. z o.o. has exclusive protection rights. ZAE ERGOM reserves the right for changes in the assortment and parameters of its products.

Type	Index Ergom	Strength [daN] Tension	Strength [daN] flexion	Max. tightening torque [Nm]	Recommended maximum bus width [mm]	B	D	h	H	M	Weights [g]
IWP 40/M8	R32RZ-06020101101	1500	800	6	50	45	40	10	40	M8	107
IWP 40/M8 (10 SZT./PCS)	R32RZ-06020101103	1500	800	6	50	45	40	10	40	M8	107
IWP 40/M10	R32RZ-06020101201	1500	800	10	50	45	40	10	40	M10	102
IWP 40/M10 (10 SZT./PCS)	R32RZ-06020101203	1500	800	10	50	45	40	10	40	M10	102
IWP 50/M6	R32RZ-06020101301	1300	1000	3	50	50	40	8	50	M6	127
IWP 50/M6 (10 SZT./PCS)	R32RZ-06020101303	1300	1000	3	50	50	40	8	50	M6	127
IWP 50/M8	R32RZ-06020101401	1400	1000	6	50	50	40	10	50	M8	131
IWP 50/M8 (10 SZT./PCS)	R32RZ-06020101403	1400	1000	6	50	50	40	10	50	M8	131
IWP 50/M10	R32RZ-06020101501	2000	1000	10	50	50	40	10	50	M10	134
IWP 50/M10 (10 SZT./PCS)	R32RZ-06020101503	2000	1000	10	50	50	40	10	50	M10	134
IWP 70/M12	R32RZ-06020101601	2000	1600	14	63	65	50	12	70	M12	275
IWP 70/M12 (10 SZT./PCS)	R32RZ-06020101603	2000	1600	14	63	65	50	12	70	M12	275
IWP 100/M12	R32RZ-06020101701	4000	1500	14	63	65	50	14	100	M12	450
IWP 100/M12 (10 SZT./PCS)	R32RZ-06020101703	4000	1500	14	63	65	50	14	100	M12	450

Date of publication: 15/2/2018

Graphic project, pictures and all technical data and descriptions in this catalogue are protected by Polish and international copyright laws.
Names and logos used in the content of this catalogue may be trademarks, for which ZAE Ergom Sp. z o.o. has exclusive protection rights.
ZAE ERGOM reserves the right for changes in the assortment and parameters of its products.