goobay®



Mounts for TV & Cable Management





Content

Mounts for TV - FIX	page 8
Mounts for TV - Motion	page 10
Mounts for TV - Fullmotion	page 11
Mounts for computer displays	page 14
Mounts for video projectors	page 15
Adapter	page 17
Cable Management	page 18

Our mounts at a glance

The Goobay mountings for televisions impress with their reliable and practical features. Easy installation and secure mounting present your TV in the best possible light. Goobay's flexible and extra-slim solutions turn your home cinema into a real experience. The versions FIX, MOTION and FULLMOTION provide a range of flexibility and functionality to meet your needs.

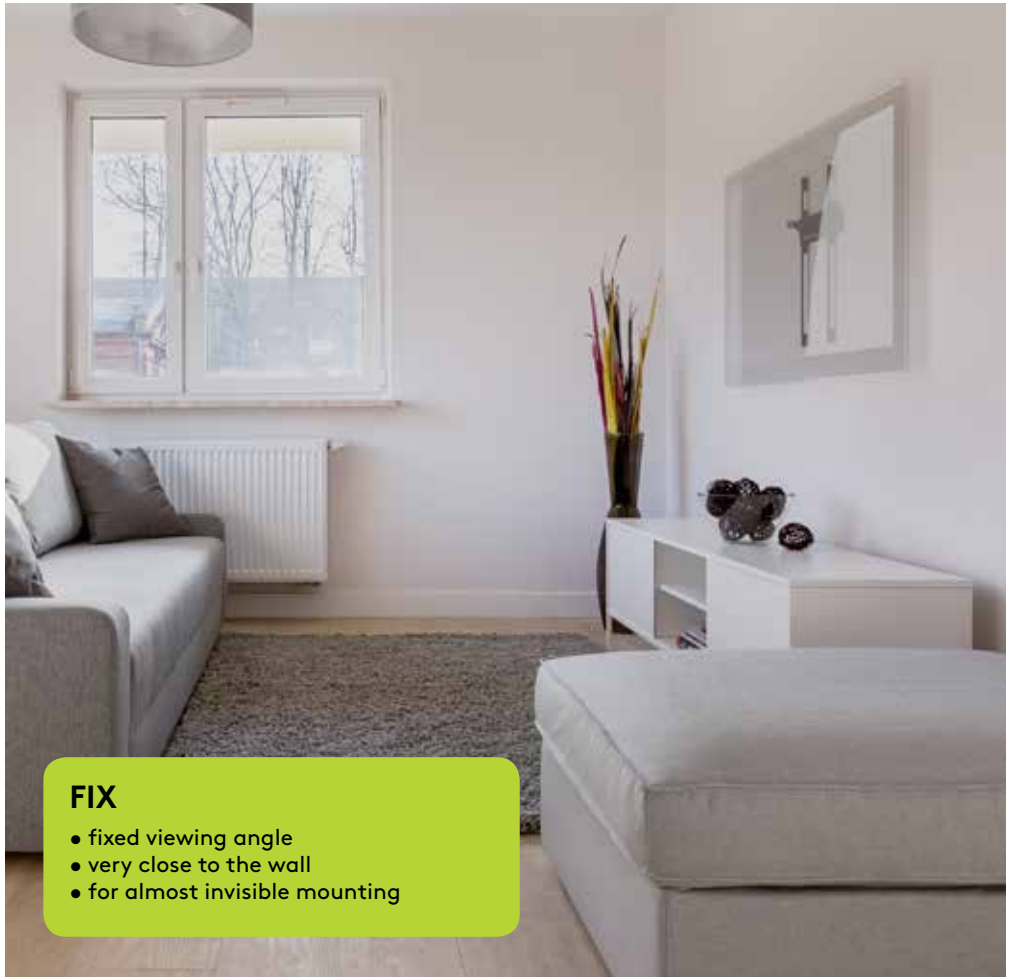

FIX
- fixed viewing angle
- very close to the wall
- for almost invisible mounting



MOTION
- movable viewing angle
- inclinable
- close to the wall
- avoids unfavourable light incidence

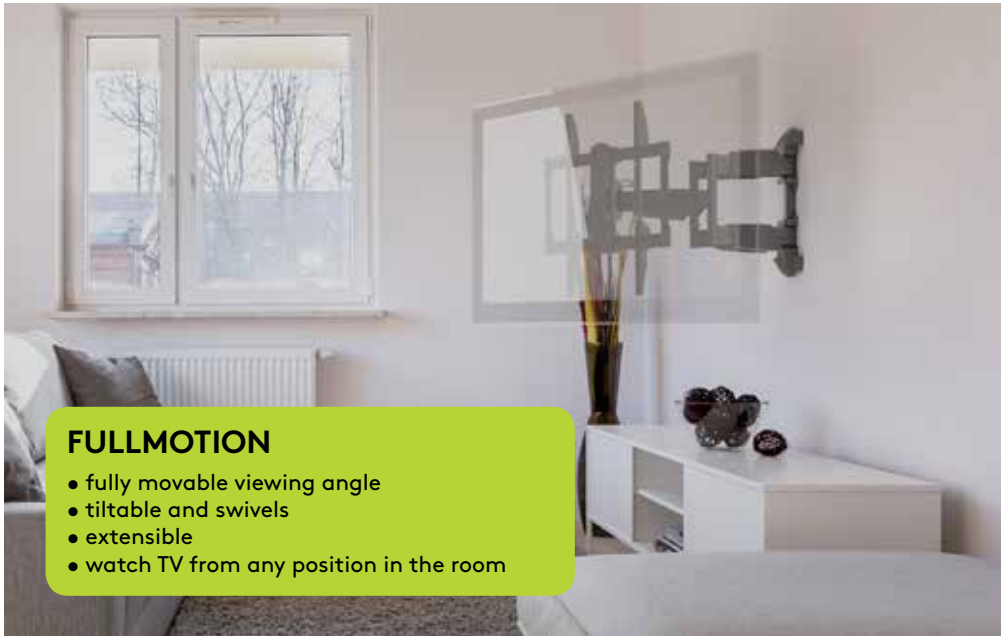

FULLMOTION
- fully movable viewing angle
- tiltable and swivels
- extensible
- watch TV from any position in the room

Buying a mount - what has to be considered?

Ensure that the TV and the mount are compatible. Flat panel TVs have threaded holes at the back; the distance between these threaded holes is described as the VESA standard. This VESA standard should be identical for the TV and the mount. If the distances between the holes are 400 mm both horizontally and vertically, the VESA standard is 400 x 400.

After checking the VESA standard, the maximum load is another decisive criterion. The weight of the TV must not exceed the maximum load-bearing capacity of the bracket.

Important: The inch and centimetre specifications of the wall brackets are approximate values. The VESA standard and the maximum load are decisive.



Wall brackets at a glance

	M up to 42" (107 cm)	L up to 58" (147 cm)	XL up to 75" (190 cm)
Fix	-	TV EasyMount L (63490) TV EasyFix Invisible L (63474) TV EasyFix Ultraslim L (63473)	TV EasyMount XL (63478) TV EasyFix Invisible XL (63475) TV EasyFix Ultraslim XL (63493) TV EasyFix XL2 (67820)
Motion	TV EasyFlex M (51883/51893)	TV EasyFlex L (67822) TV EasyFlex Slim L (63494)	TV EasyFlex Slim XL (63495)
	TV EasyFlip M (63485)	-	-
Fullmotion	TV EasyScope M (51884/51984) TV EasyScope Twin M (51885/51895) TV EasyFold M (63484)	TV EasyFold L (63486) TV EasyFold ML (69295)	TV EasyFold XL (63487) TV EasyFold Slim XL2 (44828) TV EasyFold XL Croner (69242)



TV EasyMount L
easy-to-install TV wall-mount bracket

- fewer parts make installation easier
- suitable for weights up to 50 kg
- distance from wall as low as 15 mm

L

26-58“ (66-147 cm)

200x200 mm, 300x300 mm, 400x200 mm, 400x400 mm

A-No. 63490



TV EasyMount XL
easy-to-install TV wall-mount bracket

- fewer parts make installation easier
- suitable for weights up to 50 kg
- distance from wall as low as 24 mm

XL

37-75“ (94-190 cm)

100x100 mm, 200x100 mm, 200x200 mm, 400x200 mm, 300x300 mm, 400x400 mm, 600x400 mm, 800x400 mm, 800x600 mm

A-No. 63478



TV EasyFix Invisible
almost invisible wall-mount bracket

- minimum distance from wall as low as 10 mm
- additional TV holder for secure fit
- suitable for weights up to 40 kg

L

26-58“ (66-147 cm)

200x200 mm, 300x300 mm, 400x200 mm, 400x400 mm

A-No. 63474

XL

37-75“ (94-190 cm)

200x200 mm, 300x300 mm, 400x200 mm, 400x400 mm, 600x400 mm, 800x400 mm

A-No. 63475

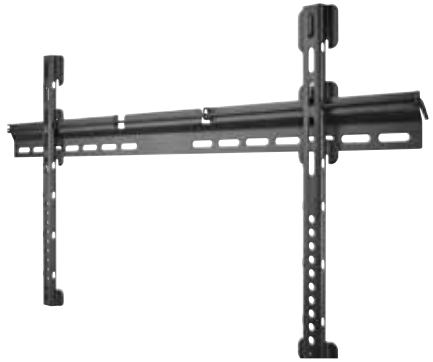

TV EasyFix Ultraslim
ultra low-profile wall-mount bracket

- minimum distance from wall as low as 19 mm
- additional TV holder for secure fit
- suitable for weights up to 45 kg

L

23-58“ (58-147 cm)

100x100 mm, 200x100 mm, 200x200 mm, 400x200 mm

A-No. 63473

XL

57-75“ (94-190 cm)

300x300 mm, 400x200 mm, 400x400 mm, 600x400 mm, 800x400 mm

A-No. 63493



TV EasyFix XL2
robust wall mount bracket

- stable powder-coated steel arms
- additional TV holder for secure fit
- suitable for weights up to 55 kg

XL

37-75“ (94-190 cm)

200x200 mm, 300x300 mm, 400x200 mm, 400x400 mm, 600x400 mm

A-No. 67820

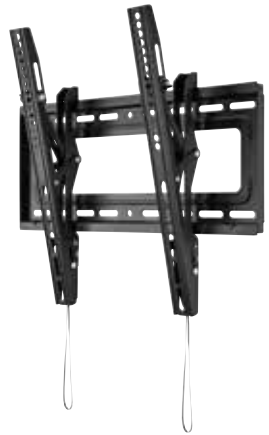

TV EasyFlex L
tiltable wall mount bracket

- variable tilt up to 12°
- suitable for weights up to 40 kg

L

32-58" (82-147 cm)

200x200 mm, 300x300 mm, 400x200 mm, 400x400 mm

A-No. 67822



TV EasyFlex Slim
extra low-profile tiltable wall-mount bracket

- minimum distance from wall as low as 45 mm
- flexible tilt up to 10°
- suitable for weights up to 75 kg

L	XL
23-58" (58-147 cm)	37-75" (94-190 cm)
100x100 mm, 200x100 mm, 200x200 mm, 400x200 mm	200x200 mm, 300x300 mm, 400x200 mm, 400x400 mm, 600x400 mm, 800x400 mm
A-No. 63494	A-No. 63495



TV EasyFlip M
wall-mount bracket

- 180° articulation for mounting TV in corners
- stable powder-coated steel arms
- suitable for weights up to 25 kg

M

26-42" (66-107 cm)

200x200 mm, 300x300 mm, 400x200 mm, 400x400 mm

A-No. 63485



TV EasyFlex M
tiltable wall-mount bracket

- tiltable up to 20° and 60° articulation
- suitable for weights up to 30 kg

M

17-58" (43-147 cm)

75x75 mm, 100x100 mm, 200x100 mm, 200x200 mm

A-No. 51893 - black
A-No. 51883 - silver

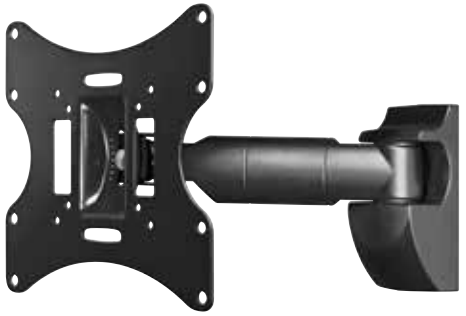

TV EasyScope M
telescopic wall-mount bracket

- distance from wall adjustable between 100-330 mm
- tiltable up to 20° and 180° articulation
- suitable for weights up to 30 kg

M

17-42" (43-107 cm)

75x75 mm, 100x100 mm, 200x100 mm, 200x200 mm

A-No. 51894 - black
A-No. 51884 - silver



TV EasyScope Twin M
dual telescopic wall-mount bracket

- distance from wall adjustable between 100-470 mm
- tiltable up to 20° and 180° articulation
- suitable for weights up to 30 kg

M

17-42" (43-107 cm)

75x75 mm, 100x100 mm, 200x100 mm, 200x200 mm

A-No. 51895 - black
A-No. 51885 - silver

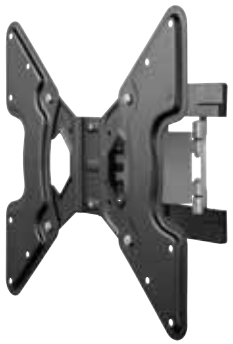

TV EasyFold ML
dual-wing wall-mount bracket

- distance from wall adjustable between 37-272 mm
- stable powder-coated steel arms
- tiltable up to 30° and 80° articulation
- suitable for weights up to 30 kg

ML

23-58" (48-147 cm)

100x100 mm, 200x100 mm, 200x200 mm, 300x300 mm, 400x200 mm, 400x400 mm

A-No. 69295

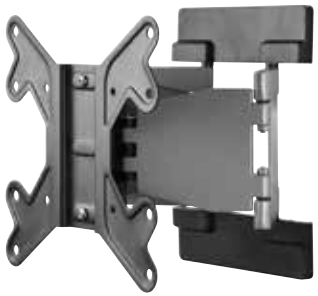

TV EasyFold M
dual-wing wall-mount bracket

- stable powder-coated steel arms
- distance from wall adjustable between 27-262 mm
- tiltable up to 15° and 100° articulation
- suitable for weights up to 30 kg

M

17-42" (43-147 cm)

100x100 mm, 200x100 mm, 200x200 mm

A-No. 63484



TV EasyFold
dual-wing wall-mount bracket

- stable powder-coated steel arms
- distance from wall adjustable between 74-475 mm
- tiltable up to 17° and 120° articulation
- suitable for weights up to 40 kg

L

26-58" (66-147 cm)

200x200 mm, 300x300 mm, 400x200 mm, 400x400 mm

A-No. 63486

XL

32-75" (81-190 cm)

200x200 mm, 300x300 mm, 400x200 mm, 400x400 mm, 600x400 mm

A-No. 63487



TV EasyFold Slim XL2
low-profile dual-wing wall-mount bracket

- distance from wall adjustable between 49-482 mm
- stable powder-coated steel arms
- tiltable up to 17° and 120° articulation
- suitable for weights up to 45 kg

XL2

37-75" (94-190 cm)

200x200 mm, 300x300 mm, 400x200 mm, 400x400 mm, 600x400 mm

A-No. 44828



TV EasyFold Corner XL
Corner wall-mount bracket

- distance from wall adjustable between 125-515 mm
- stable powder-coated steel arms
- tiltable up to 30° and 10° articulation
- suitable for weights up to 60 kg

XL

37-65" (94-165 cm)

200x200 mm, 300x300 mm, 400x200 mm, 400x400 mm, 600x400 mm, 800x400 mm

A-No. 69242



ScreenFlex
table mounting bracket for monitors

- tiltable up to 15° and 180° articulation
- height-adjustable between 100-400 mm
- Rubberized clamping brackets for 10 mm - 40 mm tabletops

ScreenFlex

13-32“ (33 -81 cm)

100 x 100 mm

A-No. 63496

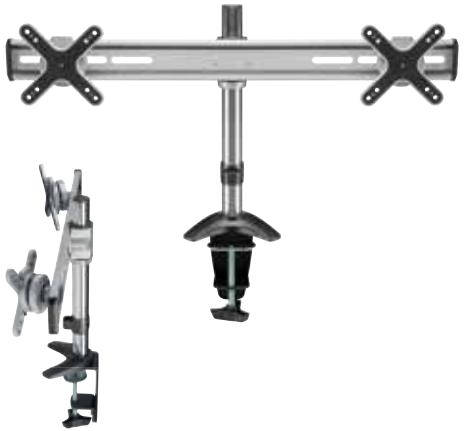

ScreenFlex Twin
table mounting bracket for 2 monitors

- tiltable up to 15° and 360° articulation
- fits Screens from 33-58 cm (13“ - 23“)
- VESA hole distances of up to 100 mm x 100 mm
- suitable for inside the desk feedthrough

ScreenFlex Twin

13-23“ (33 -58 cm)

75x75 mm, 100x100 mm

A-No. 69296



ScreenScope
telescopic table mounting bracket for monitors

- telescopic arm extends up to 385 mm
- tiltable up to 30° and 180° articulation
- height-adjustable between 100-400 mm
- Rubberized clamping brackets for 10 mm - 40 mm tabletops

ScreenScope

13-32“ (33 -81 cm)

100x100 mm

A-No. 63497



BeamerFlex
dually adjustable projector ceiling mounting bracket

- two distances from ceiling: 130 mm or 200 mm
- tiltable up to 15° and 360° articulation
- integral cable guide for a clean look
- suitable for weights up to 10 kg

BeamerFlex

for projectors

130 -320 mm hole distances

A-No. 51896 - white
A-No. 51905 - silver

coming soon



BeamerFlex L
universal ceiling mount for projectors; with cardan joint

- distance from ceiling 150 mm
- can be tilted up to 15°, swivelled up to 15° and rotated up to 360°
- integrated cable guide ensures tidiness
- suitable for weights up to 13,5 kg

BeamerFlex

for projectors

54 -320 mm hole distances

A-No. 72333

coming soon



BeamerFlex XL
universal ceiling mount for projectors

- distance from ceiling 135 mm
- can be tilted up to 20°, swivelled up to 20° and rotated up to 360°
- with integrated ball joint and knob for easy position setting even after mounting; easy horizontal alignment using quick-locking mechanism
- suitable for weights up to 25 kg

BeamerFlex

for projectors

80-500 mm hole distances

A-No. 72332

coming soon

Accessories



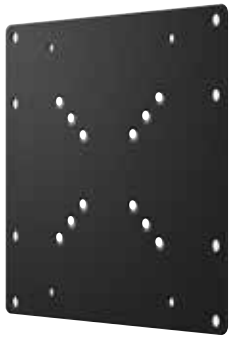

VESA adapter for TV wall mount

To extend the VESA dimensions of a TV wall-mount bracket

- for fastening to the VESA support head of a TV wall mount
- expands VESA hole intervals from 50 mm x 50 mm to 200 mm x 200 mm
- maximum load depends on the wall mount
- made of high-quality, powder-coated metal

VESA adapter

10-32" (25 -81 cm)

200x100 mm, 200x200 mm

A-No. 63267



VESA adapter for TV wall mount

To extend the VESA dimensions of a TV wall-mount bracket

- for fastening to the VESA support head of a TV wall mount
- expands VESA hole intervals from 200 mm x 200 mm to 400 mm x 400 mm
- maximum load depends on the wall mount
- made of high-quality, powder-coated metal

Vesa adapter

32-58" (81 -147 cm)

300x300 mm, 400x200 mm, 400x400 mm

A-No. 60134



Wire duct aluminum
for laying concealed wires

- 33 mm width offers space for multiple wires
- the aluminum look is a perfect match for high-quality equipment
- can be shortened to any length using common household tools
- installation material included in delivery

length 1.1 m - width 33 mm

A-No. 90723 - black
A-No. 90727 - white
A-No. 90666 - silver



Wire duct aluminum
for laying concealed wires

- 50 mm width offers space for multiple wires
- the aluminum look is a perfect match for high-quality equipment
- can be shortened to any length using common household tools
- installation material included in delivery

length 1.1 m - width 50 mm

A-No. 90724 - black
A-No. 90728 - white
A-No. 90668 - silver



WireDuct corner connector
corner connector for wire duct

- 33 mm width offers space for multiple wires
- installation material included in delivery
- the predrilled holes make installation child's play

width 33 mm

A-No. 90781 - black
A-No. 90782 - white
A-No. 90780 - silver

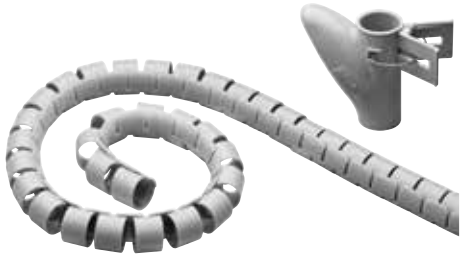

WireTube
robust spiral wire management system

- string plastic cable duct with a diameter of 20 mm
- length of 2.5 m can be adjusted by cutting with scissors
- comes with easy-insert tool

plastic

2.5 m

A-No. 51922 - grey
A-No. 51924 - black



WireSleeve
flexible and easy-to-install cable sleeve

- flexible textile hose with a diameter of 20-40 mm
- length of 1.8 m can be adjusted by cutting with scissors
- hook-and-loop closure facilitates installation

textile fabric

1.8 m

A-No. 51919 - black
A-No. 51918 - white
A-No. 51916 - grey



Goobay® by Wentronic GmbH · Pillmannstraße 12, 38112 Braunschweig