SIEMENS

Data sheet 3SU1102-6AA60-1AA0



Indicator lights, 22 mm, round, plastic, white, lens, smooth, with holder, LED module, with integrated LED 24 V AC/DC, screw terminal

Product brand name	SIRIUS ACT
Product designation	Indicator lights
Design of the product	Complete unit
Product type designation	3SU1
Manufacturer's article number	
• of supplied LED module	3SU1401-1BB60-1AA0
• of the supplied holder	3SU1500-0AA10-0AA0
• of supplied repeater	3SU1001-6AA60-0AA0

Enclosure

Number of command points	1

Actuator

Product extension optional Light source	Yes
Color	
• of the actuating element	White
Material of the actuating element	plastic
Shape of the actuating element	round
Outer diameter of the actuating element	29.45 mm

Front ring

Subject to change without notice
© Copyright Siemens

Product component front ring	No

Holder

Material of the holder	Plastic

Display

Number of LED modules	1

General technical data

Product component	
• Light source	Yes
Insulation voltage	
• rated value	320 V
Degree of pollution	3
Surge voltage resistance rated value	4 kV
Protection class IP	IP66, IP67, IP69(IP69K)
• of the terminal	IP20
Degree of protection NEMA rating	NEMA 1, 2, 3, 3R, 4, 4X, 12, 13
Shock resistance	
• acc. to IEC 60068-2-27	Sinusoidal half-wave 50 g / 11 ms
• for railway applications acc. to DIN EN 61373	Category 1, Class B
Reference code acc. to DIN EN 81346-2	P
Reference code acc. to DIN EN 61346-2	P

Supply voltage

Type of voltage of the supply voltage	
• of the light source	AC/DC
Supply voltage of the light source at AC	
• at 50 Hz rated value	24 V
• at 60 Hz rated value	24 V
Supply voltage of the light source at DC	
• rated value	24 V
Relative negative tolerance of the supply voltage	20 %
Relative positive tolerance of the supply voltage	20 %

Control circuit/ Control

Inrush current maximum	2 A

Connections/Terminals

Type of electrical connection	
• of modules and accessories	Screw-type terminal
Type of connectable conductor cross-sections	
• solid with core end processing	2x (0.5 ... 0.75 mm²)
• solid without core end processing	2x (1.0 ... 1.5 mm²)
• finely stranded with core end processing	2x (0.5 ... 1.5 mm²)
• finely stranded without core end processing	2x (1,0 ... 1,5 mm²)

Subject to change without notice
© Copyright Siemens

• at AWG conductors	2x (18 ... 14)
Tightening torque of the screws in the bracket	1 ... 1.2 N·m
Tightening torque	
• with screw-type terminals	0.8 ... 0.9 N·m

Lamp

Type of light source	LED
Color of the light source	white
Light intensity	900 ... 1 400 mcd

Ambient conditions

Ambient temperature	
• during operation	-25 ... +70 °C
• during storage	-40 ... +80 °C
Environmental category during operation acc. to IEC 60721	3M6, 3S2, 3B2, 3K6 (with relative air humidity of 10 ... 95 %, no condensation in operation permitted for all devices behind front panel)

Installation/ mounting/ dimensions

Mounting type	front panel mounting
• of modules and accessories	Front plate mounting
Height	40 mm
Width	30 mm
Shape of the installation opening	round
Mounting diameter	22.3 mm
Positive tolerance of installation diameter	0.4 mm
Mounting height	11.8 mm
Installation width	29.5 mm
Installation depth	49.7 mm

Certificates/approvals

Subject to change without notice
© Copyright Siemens

General Product Approval				Declaration of Conformity	
CCC	CSA	UL	EAC	EG-Konf.	Miscellaneous

Test Certificates		Marine / Shipping			
Special Test Certificate	Type Test Certificates/Test Report	ABS	LRS	PRS	RINA

Marine / Shipping		other
RMRS		Confirmation

Further information

Information- and Downloadcenter (Catalogs, Brochures,…)
http://www.siemens.com/industrial-controls/catalogs

Industry Mall (Online ordering system)
https://mall.industry.siemens.com/mall/en/en/Catalog/product?mlfb=3SU1102-6AA60-1AA0

Cax online generator
http://support.automation.siemens.com/WW/CAXorder/default.aspx?lang=en&mlfb=3SU1102-6AA60-1AA0

Service&Support (Manuals, Certificates, Characteristics, FAQs,...)
https://support.industry.siemens.com/cs/ww/en/ps/3SU1102-6AA60-1AA0

Image database (product images, 2D dimension drawings, 3D models, device circuit diagrams, EPLAN macros, ...)
http://www.automation.siemens.com/bilddb/cax_de.aspx?mlfb=3SU1102-6AA60-1AA0&lang=en

© Copyright Siemens



Subject to change without notice
© Copyright Siemens

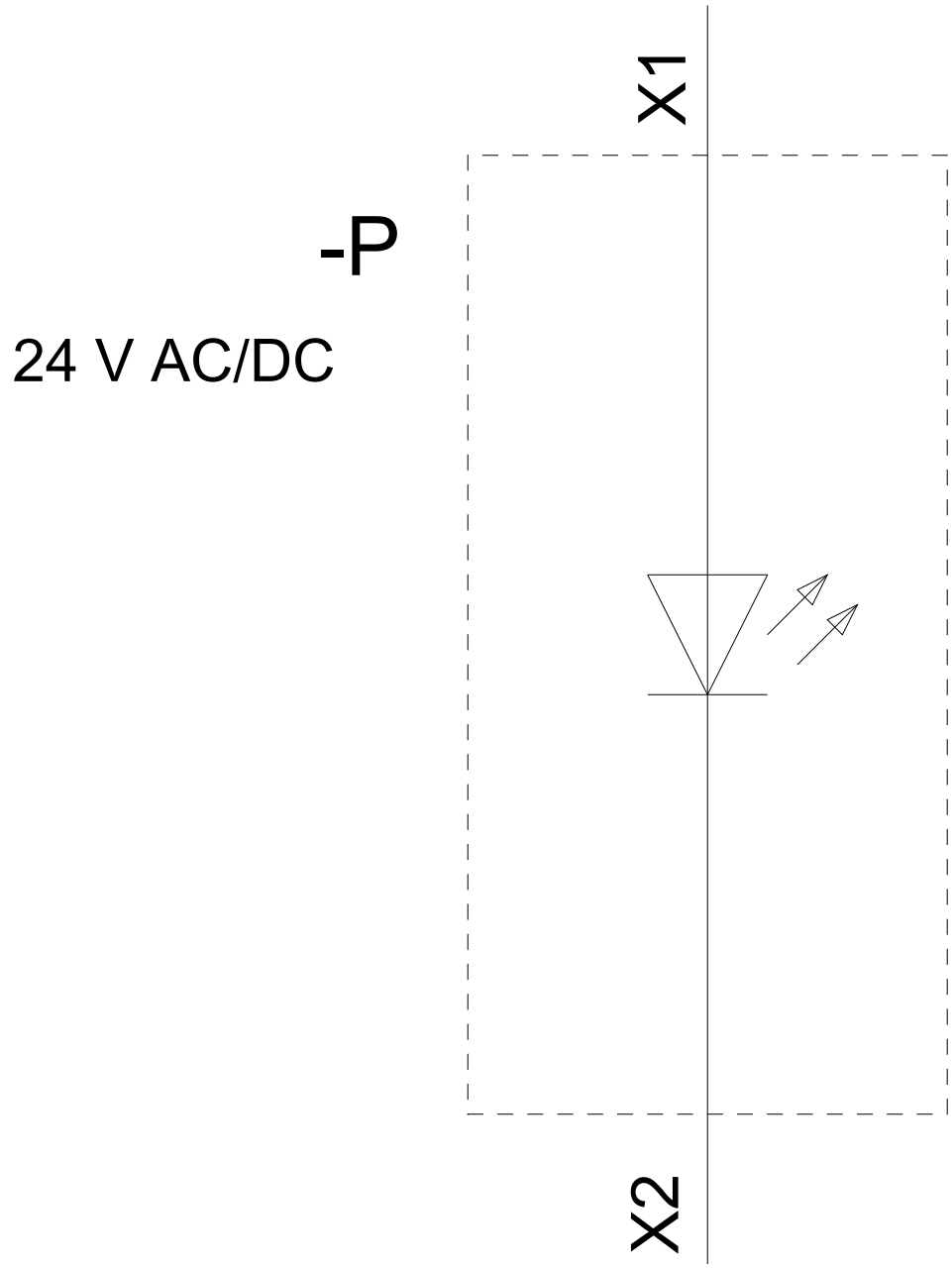

last modified: 02/21/2019

© Copyright Siemens