Conformity to standards	**IEC/EN 60670-1**
Material	**Aluminium alloy**
Surface treatment	**Passivation with fluoro-zirconium**
Painting	**Hot polymerized non-toxic polyester**
Protection rating (IP as per IEC/EN 60529)	**IP66/IP67**
Colour	**RAL7042 light hammer finish**
Resistance to impacts (IK rating as per IEC/EN 62262)	**IK08**
Insulation class	**I**
Storage temperature	**-40°C - +100°C**
Operating temperature	**-40°C - +100°C**

CE



Junction **boxes** in aluminium alloy **IP66/IP67**

Description	Dimensions (mm) external	Dimensions (mm) internal	Palazzoli code	Pack Q.ty
UNI B9	100x100x59	88x88x44	**520009**	12
UNI B11	140x115x60	128x103x46	**520011**	12
UNI B12	166x141x64	153x128x49	**520012**	6
UNI B14	192x168x80	176x152x65	**520014**	6
UNI B19	253x217x93	236x201x75	**520019**	1
UNI B20	314x264x122	292x243x104	**520020**	1
UNI B21	410x315x150	386x291x126	**520021**	1

Equipment included: 2 kits for making earth connections.
Characteristics: boxes suited for EN 50022 rail mounting horizontally or vertically using M4x6 self-tapping screws. EN 50022 rail from Palazzoli is to be mounted diagonally.

Technical accessories:



page 157



Back plates in zinced steel for UNIBOX boxes

Description	Dimensions (mm)	Palazzoli code	Pack Q.ty
UNI B11	119x78	**522011**	1
UNI B12	132x108	**522012**	1
UNI B14	165x125	**522014**	1
UNI B19	200x165	**522019**	1
UNI B20	250x210	**522020**	1
UNI B21	345x257	**522021**	1

Equipment included: screws for mounting inside the box, 2 kits for making earth connections.



EN 50022 rails for UNIBOX boxes

Description	Working length (mm)	Palazzoli code	Pack Q.ty
UNI B9	60	**521009**	1
UNI B11	95	**521011**	1
UNI B12	125	**521012**	1
UNI B14	170	**521014**	1
UNI B19	230	**521019**	1
UNI B20	290	**521020**	1
UNI B21	380	**521021**	1

Equipment included: screws for mounting inside the box.

UNIBOX series

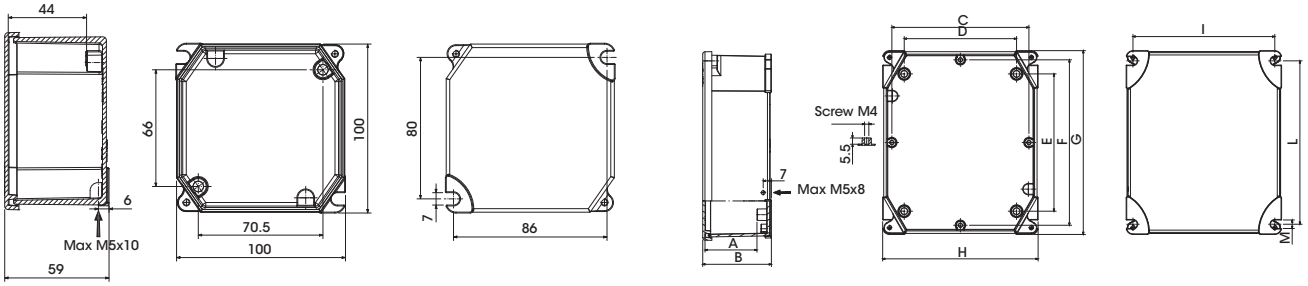

Code	A (mm)	B (mm)	C (mm)	D (mm)	E (mm)	F (mm)	G (mm)	H (mm)	I (mm)	L (mm)	M (mm)
520011	46	61	95	66	107	120	140	115	120	100	7
520012	49	64	121	99	121	146	166	141	125	144	7,5
520014	65	80	148	113	153	172	192	168	149	168	7,5
520019	76	93	194	153	188	230	253	217	196	226	10
520020	105,5	122	236	198	238	286	314	264	236	275	10
520021	132,5	150	286	248	333	381	410	315	283	367	10

Back plate

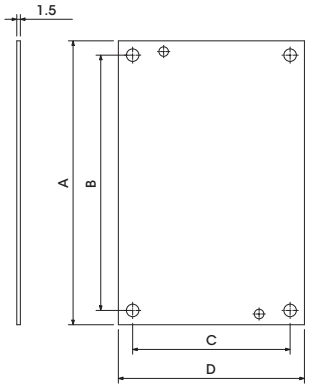

Code	A (mm)	B (mm)	C (mm)	D (mm)
522011	119	107	66	78
522012	132	121	99	108
522014	165	153	113	125
522019	200	188	153	165
522020	250	238	198	210
522021	345	333	248	257

EN 50022 rails

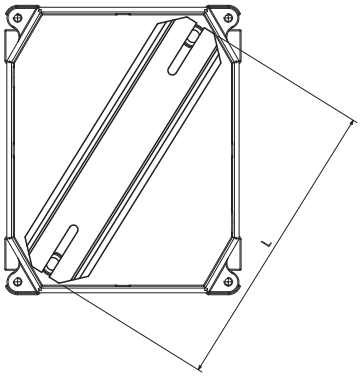

Code	L (mm)
521009	100
521011	138
521012	164
521014	202
521019	264
521020	320
521021	422

SEQUENTIAL INDEX

Palazzoli code	Marks	Pack Q.ty	Catalogue page
515111		1	113-150
515112		1	113-150
515124		1	113-150
515144		1	113-150
515200		1	113-150
515214		1	113-150
515221		1	113-150
515224		1	113-150
515234		1	113-150
515300		1	150
515313		1	150
515323		1	150
515411		1	150
515413		1	150
515423		1	150
515453		1	150
515512		1	150
515610		1	150
515613		1	150
515632		1	150
515637		1	150
515642		1	150
515645		1	150
515822		1	150
516314		1	151
516324		1	151
516414		1	151
516424		1	151
516454		1	151
516611		1	151
516613		1	151
516631		1	151
516636		1	151
516643		1	151
516823		1	151
516826		1	151
518204		1	113-150
518206		1	113-150
518207		1	150
518209		1	113-150
518211		1	150
519210		1	151
519310		1	151
519610		1	151
520009		12	139
520011		12	139
520012		6	139
520014		6	139
520019		1	139
520020		1	139
520021		1	139
521009		1	139
521011		1	139
521012		1	139
521014		1	139
521019		1	139
521020		1	139
521021		1	139
521210		1	149
521214		1	149
521314		1	149
521414		1	149
522011		1	139
522012		1	139
522014		1	139
522019		1	139
522020		1	139
522021		1	139
525200		1	150
525300		1	150
525410		1	150
529210		1	151
529310		1	151
529410		1	151
531011		1	145
531021		1	145
531040		1	145
531042		1	145
531062		1	145
531200		1	145
531211		1	145
531213		1	360
531220		1	101-145
531221		1	101-145
531222		1	145
531223		1	360
531231		1	145
531233		1	360
531240		1	145
531241		1	145
531242		1	145
531262		1	145
531311		1	145
531312		1	360
531321		1	145
531322		1	360
531331		1	101-145
531332		1	360
531340		1	145
531411		1	145
531431		1	145
531440		1	145
531442		1	145
531540		1	145
531640		1	145
531662		1	145
532005		1	142
532006		1	142
532015		1	142
532016		1	103-142
532017		1	103-142
532018		1	103-142
532035		5	142
532045		1	142
532055		1	142
532100		1	102
532116		1	142
532117		1	142
532118		1	142
532200		1	99
532201		1	99
532202		1	99
532203		1	99
532204		1	99
532209		1	98
532210		1	98
532211		1	99
532219		1	98
532220		1	98
532225		8	359
532285		1	359
532295		1	359
532300		1	99
532301		1	99
532302		1	99
532303		1	99
532304		1	99
532311		1	99
532325		4	359
532346		1	359
532385		1	359
532516		1	103-143
532557		1	103-143
532567		1	359
532577		1	359
532618		1	359
532628		1	359
532638		1	359
532648		1	359
532658		1	103-143
532667		1	359
532668		1	359
532677		1	359
532678		1	359
532688		1	359
532698		1	359
532700		1	102-271
532701		1	102-271
532702		1	102-271
532703		1	102-271
532704		1	102-271
532705		1	143-271
532714		1	143-271
532715		1	143-271
532716		1	103-143-271
532717		1	103-143-271
532718		1	103-143-271
532725		1	155
532735		1	155
532745		1	155
532747		1	155
532748		1	155
532755		1	155
532765		1	155
532768		1	155
532806		1	114
532816		1	114
532826		1	114
532836		1	114-267
532846		1	114
532856		1	114
532866		1	114
532876		1	114-267
532895		1	114
535126		1	146
535131		1	146
535135		1	146
535137		1	146
535140		1	146
535142		1	146
535157		1	146
535162		1	146
535320		1	146
535321		1	101-146
535322		1	146
535323		1	146
535324		1	146
535325		1	146
535326		1	146
535327		1	146
535328		1	146
535640		1	146
535643		1	101-146
536311	1-8-10	1	41
536312	1-8-10	1	41
536322	1-8-10	1	41
536338	1-8-10	1	41
538005		1	143
538006		1	143
538015		1	143
538016		1	143
538017		1	143
538018		1	143
538035		1	143
538045		1	143
538055		1	143
538110		2	101-147-185
538116		1	143
538117		1	143
538118		1	143
538130		2	101-147-185
538180		1	101-147
538210		2	101-147-185
538230		2	101-147-185
538280		1	101-147
538310		1	147-185
538330		1	147-185
538380		1	147
538385		1	147
538400		1	102
538410		1	102-262-271
538421		1	103
538425		1	99
538429		1	103
538432		1	99
538436		1	103
538610		10	102-360
538620		10	102-360
538630		5	102-360
538701		1	359
538702		1	359
538703		1	103
538711		1	103
538712		1	103
538791		50	99
538800		1	99-262
538801		1	99
538802		1	99-262
538803		1	99
538804		1	99-262
540000		1	360
540001		1	360
540002		1	360
540003		1	360
540004		1	360
540005		1	360
540006		1	360
540030		1	114-151
540031		5	114-151
540032		1	114-151

Mark legend: 1 = IMQ 2 = VDE 3 = R.i.na. 4 = M.M.I. 5 = ENEC 6 = CCC 7 = cULus 8 = UKR 9 = Lloyd's Register 10 = GOST-R