SIEMENS

Data sheet 8WD4408-0CD

Bracket for base mounting, accessory for signaling columns, with diameter 70 mm



General technical data	
Product brand name	SIRIUS
Product designation	Bracket
Color	black
Mounting type	base mounting
Reference code	
• acc. to DIN EN 61346-2	U
• acc. to DIN EN 81346-2	U

Ambient conditions	
Ambient temperature during operation	-20 ... +50 °C
Protection class IP	IP65
Depth	76.5 mm
Height	57 mm
Width	55 mm

Certificates/approvals

Subject to change without notice
© Copyright Siemens

General Product Approval	EMC	Declaration of Conformity	other
 			Miscellaneous

Further information

Information- and Downloadcenter (Catalogs, Brochures,…)
http://www.siemens.com/industrial-controls/catalogs

Industry Mall (Online ordering system)
https://mall.industry.siemens.com/mall/en/en/Catalog/product?mlfb=8WD4408-0CD

Cax online generator
http://support.automation.siemens.com/WW/CAXorder/default.aspx?lang=en&mlfb=8WD4408-0CD

Service&Support (Manuals, Certificates, Characteristics, FAQs,...)
https://support.industry.siemens.com/cs/ww/en/ps/8WD4408-0CD

Image database (product images, 2D dimension drawings, 3D models, device circuit diagrams, EPLAN macros, ...)
http://www.automation.siemens.com/bilddb/cax_de.aspx?mlfb=8WD4408-0CD&lang=en

Subject to change without notice
© Copyright Siemens

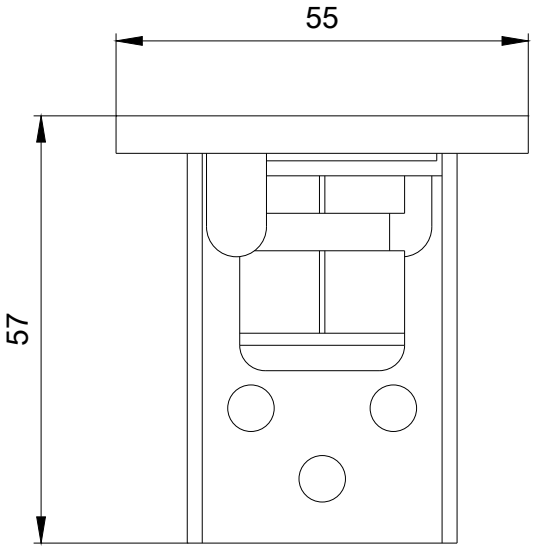

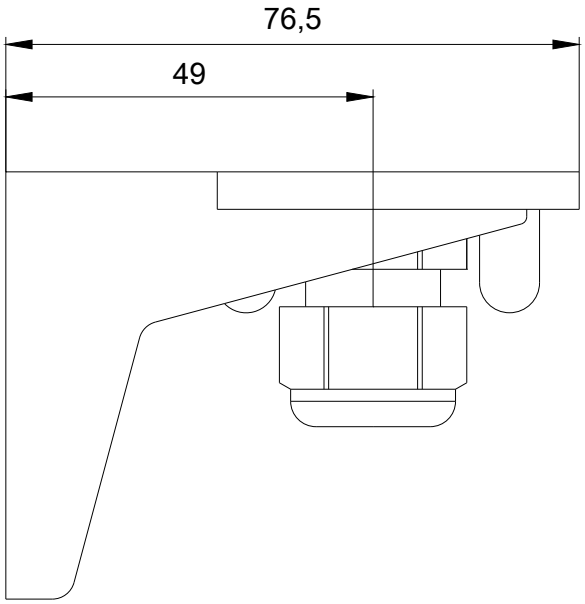

last modified: 04/18/2019

Subject to change without notice
© Copyright Siemens