SIEMENS

Data sheet 3SU1000-0AB60-0AA0

Pushbutton, 22 mm, round, plastic, white, pushbutton, flat momentary contact type



Product brand name	SIRIUS ACT
Product designation	Pushbuttons
Design of the product	Actuating/signaling element
Product type designation	3SU1

Enclosure

Number of command points	1

Actuator

Design of the operating mechanism	Flat button
Manner of function of the actuating element	Momentary contact type
Product extension optional Light source	No
Color	
• of the actuating element	white
Material of the actuating element	plastic
Shape of the actuating element	round
Outer diameter of the actuating element	29.5 mm

Front ring

Product component front ring	Yes
Design of the front ring	Standard

Subject to change without notice
© Copyright Siemens

Material of the front ring	plastic
Color of the front ring	black

General technical data

Protection class IP	IP66, IP67, IP69(IP69K)
Degree of protection NEMA rating	NEMA 1, 2, 3, 3R, 4, 4X, 12, 13
Shock resistance	
• acc. to IEC 60068-2-27	Sinusoidal half-wave 50 g / 11 ms
• for railway applications acc. to DIN EN 61373	Category 1, Class B
Operating frequency maximum	3 600 1/h
Mechanical service life (switching cycles)	
• typical	10 000 000
Reference code acc. to DIN EN 81346-2	S
Reference code acc. to DIN EN 61346-2	S

Ambient conditions

Ambient temperature	
• during operation	-25 ... +70 °C
• during storage	-40 ... +80 °C
Environmental category during operation acc. to IEC 60721	3M6, 3S2, 3B2, 3C3, 3K6 (with relative air humidity of 10 ... 95 %)

Installation/ mounting/ dimensions

(height)	29.5 mm
Width	29.5 mm
Shape of the installation opening	round
(mounting diameter)	22.3 mm
Positive tolerance of installation diameter	0.4 mm
Mounting height	11 mm
Installation width	29.5 mm
Installation depth	24.3 mm

Certificates/approvals

Subject to change without notice
© Copyright Siemens

General Product Approval			Declaration of Conformity	Test Certificates
CSA	UL	EAC	EG-Konf.	Miscellaneous / Special Test Certificate

Test Certificates	Marine / Shipping				
Type Test Certificates/Test Report	ABS	LRS	PRS	RINA	RMRS

Marine / Shipping	other
DNVGL.COM/AF	Confirmation

Further information

Information- and Downloadcenter (Catalogs, Brochures,…)
http://www.siemens.com/industrial-controls/catalogs

Industry Mall (Online ordering system)
https://mall.industry.siemens.com/mall/en/en/Catalog/product?mlfb=3SU1000-0AB60-0AA0

Cax online generator
http://support.automation.siemens.com/WW/CAXorder/default.aspx?lang=en&mlfb=3SU1000-0AB60-0AA0

Service&Support (Manuals, Certificates, Characteristics, FAQs,...)
https://support.industry.siemens.com/cs/ww/en/ps/3SU1000-0AB60-0AA0

Image database (product images, 2D dimension drawings, 3D models, device circuit diagrams, EPLAN macros, ...)
http://www.automation.siemens.com/bilddb/cax_de.aspx?mlfb=3SU1000-0AB60-0AA0&lang=en

© Copyright Siemens

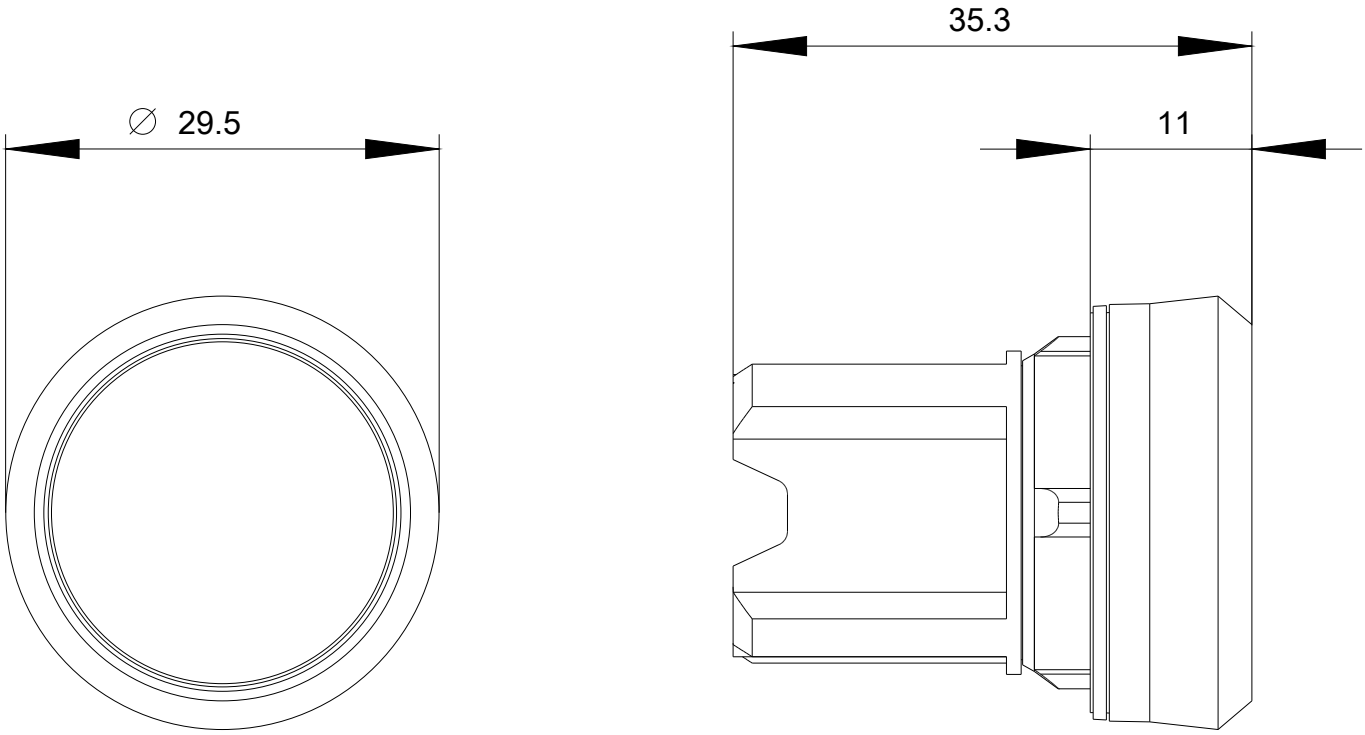

last modified: 05/08/2019

Subject to change without notice
© Copyright Siemens