OPK SERIES PUSH-IN TYPE EARTH RAIL TERMINAL BLOCKS

PUSH IN

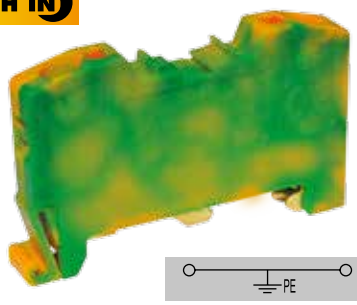

OPK -T 4

Order No: 1199

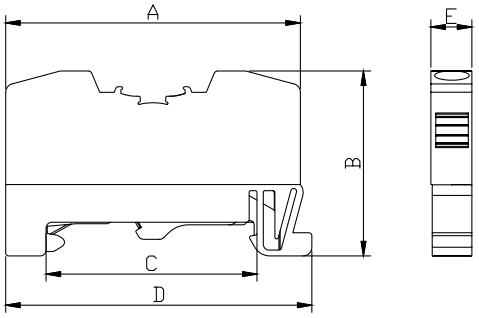

Dimensions (mm)	A	B	C	D	E
	51,0	31,8	34,5	52,6	7,1

MATERIAL	
Body	PA6.6
Bridge	Copper
Orange Button	PA6.6
Spring/ Yay	Stainless Steel
The Foot Which Contact to the Rail	Brass
Temp.	-40 ºC, +140 ºC
Cable Strip L.	9 mm

DATA	TSE / CE
Voltage	750 V
Section	4,0 mm²
Norm	EN-60947-7-2
Pcs	100

ACCESSORIES	
Stopper	1202,1222,1212
Group Sticker	1232
Marking	9770 / 4390 / 4442 / 9540 7301

PUSH IN

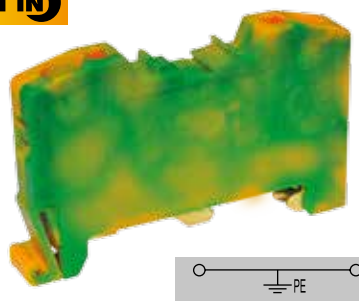

OPK -T 10

Order No: 1200

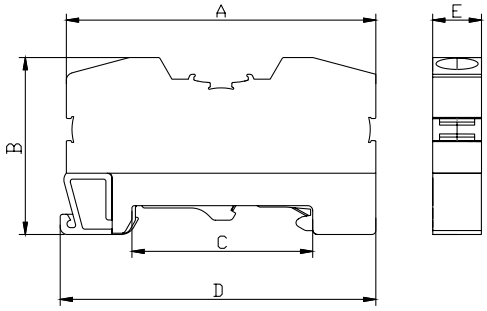

Dimensions (mm)	A	B	C	D	E
	62,5	36,5	34,5	64,5	10,0

MATERIAL	
Body	PA6.6
Bridge	Copper
Orange Button	PA6.6
Spring/ Yay	Stainless Steel
The Foot Which Contact to the Rail	Brass
Temp.	-40 ºC, +140 ºC
Cable Strip L.	12 mm

DATA	TSE / CE
Voltage	750 V
Section	10 mm²
Norm	EN-60947-7-2
Pcs	100

ACCESSORIES	
Stopper	1202,1222,1212
Group Sticker	1232
Marking	9770 / 2630 / 4442 / 9540 7301