SUITABLE FOR ZONE 2 (GAS) AND 21-22 (DUST)





Isolator switches
in aluminium alloy
for wall mounting
IP66

Rated current (A)	Poles	Boxes dimensions (mm)	Hole type	Palazzoli code	Pack Q.ty
16	2	92x92	M25 / M25	**272141EX**	1
	3	92x92	M25 / M25	**272142EX**	1
	4	92x92	M25 / M25	**272143EX**	1
	6	125x185	2xM25 / 2xM25	**272144EX**	1
25	2	92x92	M25 / M25	**272241EX**	1
	3	92x92	M25 / M25	**272242EX**	1
	4	92x92	M25 / M25	**272243EX**	1
	6	125x185	2xM25 / 2xM25	**272244EX**	1
40	2	125x185	M32 / M32	**272301EX**	1
	3	125x185	M32 / M32	**272302EX**	1
	4	125x185	M32 / M32	**272303EX**	1
	6	125x185	2xM32 / 2xM32	**272304EX**	1
63 Zone 21 - 22 50 Zone 2	3	125x185	M32 / M32	**282402EX**	1
	4	125x185	M32 / M32	**282403EX**	1
	6	125x185	2xM32 / 2xM32	**282404EX**	1

Equipment included: insulated cable glands. Internal and external earth terminal.
Characteristics: predisposed for restricted breathing test.



Selector switches
in aluminium alloy
for wall mounting
IP66

Rated current (A)	Poles	Boxes dimensions (mm)	Hole type	Palazzoli code	Pack Q.ty
16	3	125x185	M25 / 2xM25	**272146EX**	1
	4	125x185	M25 / 2xM25	**272147EX**	1
25	3	125x185	M25 / 2xM25	**272246EX**	1
	4	125x185	M25 / 2xM25	**272247EX**	1
40	3	125x185	M32 / 2xM32	**272306EX**	1
	4	125x185	M32 / 2xM32	**272307EX**	1
50	3	125x185	M32 / 2xM32	**282406EX**	1
	4	252x185	M32 / 2xM32	**282407EX**	1

Equipment included: insulated cable glands. Internal and external earth terminal.
Characteristics: predisposed for restricted breathing test.

ALUPRES-EX series

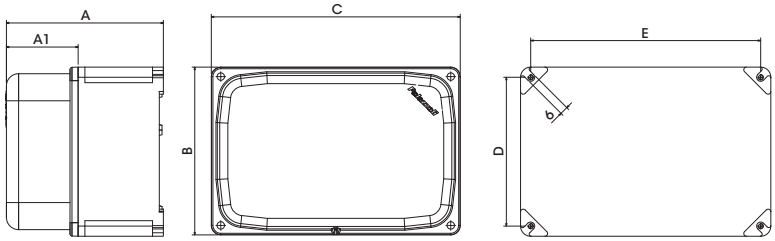

Code	A (mm)	A1 (mm)	B (mm)	C (mm)	D (mm)	E (mm)
150021EX	73	10	155	155	141	141
511910EX	77	35	92	92	78	78
511911EX	92	50	92	125	78	111
511912EX	92	50	92	185	78	171
511913EX	113	50	125	125	111	111
511917EX	113	50	125	252	111	238
511920EX	145	50	185	185	171	171
511921EX	145	57	185	252	169	236
511922EX	108	13	220	220	192	205
511923EX	197	57	252	252	224	237

CAM-EX series in thermosetting (GRP)

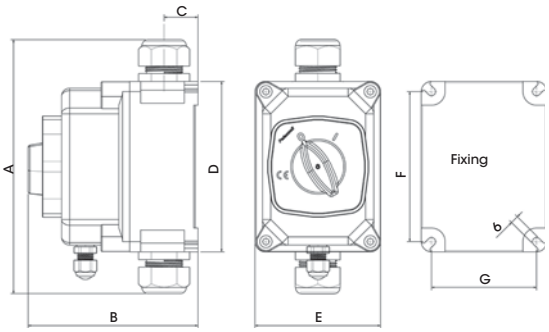

Rated current (A)	Ø entry cable (mm)	A (mm)	B (mm)	C (mm)	D (mm)	E (mm)	F (mm)	A (mm)
10-16	10÷14	175	122	25	125	92	111	78
20-25	12÷18							
32-40		260	165	37,5	185	125	169	109
50-63	16÷25							

CAM-EX series in aluminium alloy

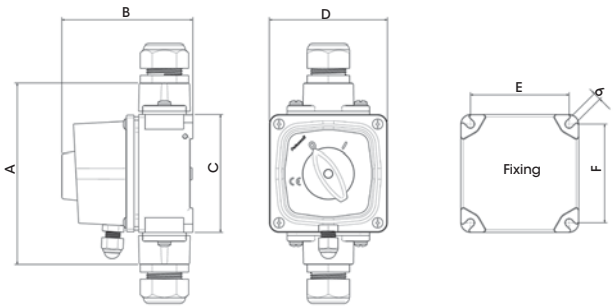

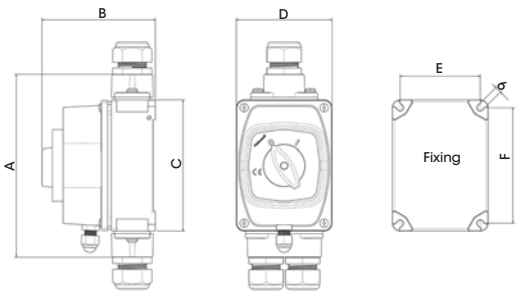

Code	Ø entry cable (mm)	A (mm)	B (mm)	C (mm)	D (mm)	E (mm)	F (mm)
272141EX	10÷14	140	87	92	92	77	77
272142EX			103				
272143EX							
272144EX	12÷18	175	120	125	92	110	77
272241EX		150	87	92	92	77	77
272242EX			103				
272243EX							
272244EX		175	120	125	92	110	77
272301EX	16÷25	275	150	185	125	170	110
272302EX							
272303EX							
272304EX		275	150	185	125	170	110
272402EX		275	150	185	125	170	110
272403EX							
272404EX							

Code	Ø entry cable (mm)	Ø exit cable (mm)	A (mm)	B (mm)	C (mm)	D (mm)	E (mm)	F (mm)
272146EX	10÷14	10÷14	165	130	125	92	77	110
272147EX								
272246EX	12÷18		165	130	125	92		
272247EX								
272306EX	16÷25	12÷18	225	170	185	125	110	170
272307EX								
272406EX			225	170	185	125		
272407EX			165		125	185	170	110

SEQUENTIAL INDEX

Palazzoli code	Marks	Pack Q.ty	Catalogue page
825302		1	198
825311	5-8	1	198
825332	5	1	198
825562	5	1	198
825762	5	1	198
825962	5	1	198
828102	8	1	197
828132	5-8	1	197
828202	8	1	197
828232	5-8	1	197
828302		1	197
828332	5	1	197
830071	8	1	204
830072	8	1	204
830512	8	1	364
830540	8	1	364
831069	8	1	309
831071	8	1	203
831072	8	1	203
831075	8	1	203
831089	8	1	309
831091	8	1	203
831092	8	1	203
831095	8	1	203
831109	8	1	309
831171	8	1	203
831172	8	1	203
831175	8	1	203
831189	8	1	309
831191	8	1	203
831192	8	1	203
831195	8	1	203
831209	8	1	309
831271	8	1	203
831272	8	1	203
831275	8	1	203
831289	8	1	309
831291	8	1	203
831292	8	1	203
831295	8	1	203
831512	8	1	364
831527		1	309
831540	8	1	364
831612	8	1	364
831627		1	309
831640	8	1	364-366
831712	8	1	364
831727		1	309
831740	8	1	364
831914	8	1	203
831934	8	1	203
831954	8	1	203
842101	8	1	198
842102	5-8	1	198
842132	5-8	1	198
842142		1	201
842201	8	1	198
842202	8	1	198
842232	5-8	1	198
842242		1	201
842301	8	1	198
842302	8	1	198
842332	5-8	1	198
842342		1	201
842762	5	1	198
842862	5-8	1	198
842962	5-8	1	198
843102	8	1	198
843111	5-8	1	198
843132	5-8	1	198
843202	8	1	198
843211	5-8	1	198
843232	5-8	1	198
843302	8	1	198
843311	5-8	1	198
843332	5-8	1	198
843462	5	1	198
843511	5	1	198
843562	5	1	198
843662	5	1	198
843711	5	1	198
843762	5-8	1	198
843862	5-8	1	198
843911	5	1	198
843962	5-8	1	198
845102	8	1	199
845111	5	1	199
845132	5-8	1	199
845202	8	1	199
845211	5-8	1	199
845232	5-8	1	199
845302		1	199
845311	5	1	199
845332	5	1	199
845562	5	1	199
845762	5	1	199
845962	5	1	199
847102	8	1	199
847132	5-8	1	199
847202	8	1	199
847211	5-8	1	199
847232	5-8	1	199
847302		1	199
847332	5	1	199
849102	3-8	1	315
849111	5-8	1	315
849132	5-8	1	315
849202	3-8	1	315
849211	5-8	1	315
849232	5-8	1	315
850042	8	1	310
850045	8	1	310
850050		1	310
850054	8	2	309
850058		10	310
850060		1	310
850061		1	209-310
850062		1	209-310
850063		1	209-310
850064		1	209-310
850065	8	1	310
850080		1	366
850090		1	311
850091		1	311
850140	8	1	309
850143	8	1	309
850172		1	209-310
850300	8	1	312
850301	8	1	312
850360		1	367
850380		1	367
850381		1	367
850391		1	312
859180		1	367
859188		10	366
859400		1	209-311
859412	8	1	204-309
860100		1	212
860140		1	213
860200		1	212
860211		1	212
860240		1	213
860900		1	213
860990		1	213
861100		1	211
861140		1	211
861200		1	211
861211		1	211
861505		1	212
861506		1	212
861507		1	212
861508		1	212
861510		1	212
861550		1	213-308
861551		1	213-306
878102	3-8	1	315
878111	5-8	1	315
878132	5-8	1	315
878202	3-8	1	315
878211	5-8	1	315
878232	5-8	1	315
9			
900253		1	191
900259		1	363
900263		1	191
900269		1	363
900273		1	191
900279		1	363
900355		1	308
900365		1	308
900375		1	308
900448		1	191
900449		1	285
900453		1	191
900459		1	363
900463		1	191
900469		1	363
900473		1	191
900479		1	363
900548		1	308
900553		1	308
900563		1	308
900573		1	308
1EX			
150021EX		1	273
2EX			
201151EX		1	289
201152EX		1	289
201156EX		1	289
202271EX		1	287
202275EX		1	287
202276EX		1	287
202282EX		1	287
261021EX		1	289
261432EX		1	287
261433EX		1	287
261435EX		1	287
261445EX		1	287
272141EX		1	283
272142EX		1	283
272143EX		1	283
272144EX		1	283
272146EX		1	283
272147EX		1	283
272241EX		1	283
272242EX		1	283
272243EX		1	283
272244EX		1	283
272246EX		1	283
272247EX		1	283
272301EX		1	283
272302EX		1	283
272303EX		1	283
272304EX		1	283
272306EX		1	283
272307EX		1	283
282402EX		1	283
282403EX		1	283
282404EX		1	283
282406EX		1	283
282407EX		1	283
292101EX		1	281
292102EX		1	281
292103EX		1	281
292201EX		1	281
292202EX		1	281
292203EX		1	281
292301EX		1	281
292302EX		1	281
292303EX		1	281
292411EX		1	281
292412EX		1	281
292413EX		1	281
4EX			
460226EX		1	265-266
460236EX		1	265-266
460246EX		1	265-266
460336EX		1	265-266
460346EX		1	265-266
463124EX		1	260-261
463126EX		1	260-261
463129EX		1	260-261
463134EX		1	260-261
463136EX		1	260-261
463137EX		1	260-261
463139EX		1	260-261
463144EX		1	260-261
463146EX		1	260-261
463147EX		1	260-261
463149EX		1	260-261
463324EX		1	261
463326EX		1	261
463329EX		1	261
463334EX		1	261
463336EX		1	261
463337EX		1	261
463339EX		1	261
463344EX		1	261
463346EX		1	261
463347EX		1	261

Certifications and marking of Palazzoli codes are in continuous development. On website www.palazzoli.com it is possible to view any updates.