SIEMENS

Data sheet 3VA9111-0WD30

terminal cover 3-pole 1 unit accessory for: 3VA1 100/160



Model	
Product brand name	SENTRON
Product designation	accessories

Certificates

General Product Approval			EMC	Declaration of Conformity	Test Certificates
VDE	Miscellaneous	EAC	RCM	EG-Konf.	Type Test Certificates/Test Report

Shipping Approval	other	
LRS	Manufacturer Declaration	Miscellaneous

Subject to change without notice
© Copyright Siemens

Further information

Information- and Downloadcenter (Catalogs, Brochures,…)
http://www.siemens.com/lowvoltage/catalogs

Industry Mall (Online ordering system)
https://mall.industry.siemens.com/mall/en/en/Catalog/product?mlfb=3VA9111-0WD30

Service&Support (Manuals, Certificates, Characteristics, FAQs,...)
https://support.industry.siemens.com/cs/ww/en/ps/3VA9111-0WD30

Image database (product images, 2D dimension drawings, 3D models, device circuit diagrams, ...)
http://www.automation.siemens.com/bilddb/cax_en.aspx?mlfb=3VA9111-0WD30

CAx-Online-Generator
http://www.siemens.com/cax

Tender specifications
http://www.siemens.com/specifications

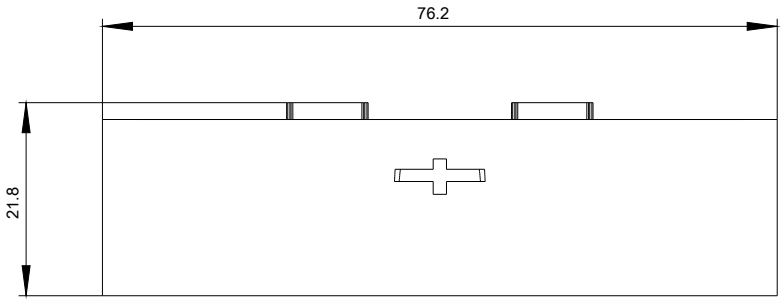

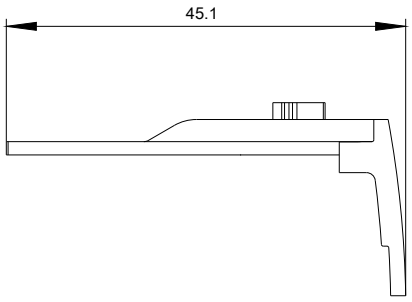

Subject to change without notice
© Copyright Siemens

last modified: 11/21/2019

Subject to change without notice
© Copyright Siemens