SIEMENS

Data sheet 3SU1002-2BM10-0AA0



Illuminable selector switch, 22 mm, round, plastic, black, Selector switch short, 3 switch positions I>O<II, momentary contact type, actuating angle 2x45°, 10:30h/12h/13:30h

Product brand name	SIRIUS ACT
Product designation	Selector switches
Design of the product	Actuating/signaling element
Product type designation	3SU1
Product line	Plastic, black, 22 mm

Enclosure	
Number of command points	1

Actuator	
Design of the operating mechanism	Selector, short
Manner of function of the actuating element	momentary contact, 2x45° (10:30 h/12 h/13:30 h), return on both sides
Product extension optional Light source	Yes
Color of the actuating element	black
Material of the actuating element	plastic
Shape of the actuating element	Handle
Outer diameter of the actuating element	32.3 mm
Number of switching positions	3
Actuating angle	
• clockwise	45°

Subject to change without notice
© Copyright Siemens

• anticlockwise	45°

Front ring

Product component front ring	Yes
Design of the front ring	standard
Material of the front ring	plastic
Color of the front ring	black

General technical data

Protection class IP	IP66, IP67, IP69(IP69K)
Degree of protection NEMA rating	1, 2, 3, 3R, 4, 4X, 12, 13
Shock resistance	
• acc. to IEC 60068-2-27	Sinusoidal half-wave 50 g / 11 ms
• for railway applications acc. to DIN EN 61373	Category 1, Class B
Vibration resistance	
• acc. to IEC 60068-2-6	10 ... 500 Hz: 5g
• for railway applications acc. to DIN EN 61373	Category 1, Class B
Operating frequency maximum	1 800 1/h
Mechanical service life (switching cycles)	
• typical	1 000 000
Reference code acc. to DIN EN 81346-2	S
Reference code acc. to DIN EN 61346-2	S

Safety related data

B10 value	
• with high demand rate acc. to SN 31920	300 000
Proportion of dangerous failures	
• with low demand rate acc. to SN 31920	20 %
• with high demand rate acc. to SN 31920	20 %
Failure rate [FIT]	
• with low demand rate acc. to SN 31920	100 FIT
T1 value for proof test interval or service life acc. to IEC 61508	20 y

Ambient conditions

Ambient temperature	
• during operation	-25 ... +70 °C
• during storage	-40 ... +80 °C
Environmental category during operation acc. to IEC 60721	3M6, 3S2, 3B2, 3C3, 3K6 (with relative air humidity of 10 ... 95 %)

Installation/ mounting/ dimensions

Height	32.3 mm
Width	32.3 mm
Shape of the installation opening	round
Mounting diameter	22.3 mm

© Copyright Siemens

Positive tolerance of installation diameter	0.4 mm
Mounting height	28.8 mm
Installation width	32.3 mm
Installation depth	25.4 mm

Certificates/ approvals

General Product Approval			Declaration of Conformity		Test Certificates
CSA	UL	EAC	EG-Konf.	Miscellaneous	Type Test Certificates/Test Report

Test Certificates	Marine / Shipping				
Special Test Certificate	ABS	LRS	PRS	RINA	RMRS

Marine / Shipping	other
DNVGL.COM/AF	Confirmation

Further information

Information- and Downloadcenter (Catalogs, Brochures,…)
https://www.siemens.com/ic10

Industry Mall (Online ordering system)
https://mall.industry.siemens.com/mall/en/en/Catalog/product?mlfb=3SU1002-2BM10-0AA0

Cax online generator
http://support.automation.siemens.com/WW/CAXorder/default.aspx?lang=en&mlfb=3SU1002-2BM10-0AA0

Service&Support (Manuals, Certificates, Characteristics, FAQs,...)
https://support.industry.siemens.com/cs/ww/en/ps/3SU1002-2BM10-0AA0

Image database (product images, 2D dimension drawings, 3D models, device circuit diagrams, EPLAN macros, ...)
http://www.automation.siemens.com/bilddb/cax_de.aspx?mlfb=3SU1002-2BM10-0AA0&lang=en

Subject to change without notice
© Copyright Siemens

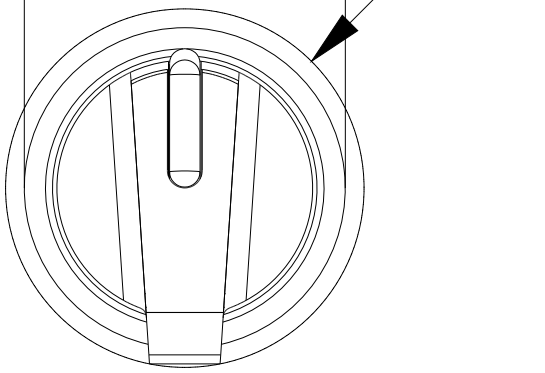

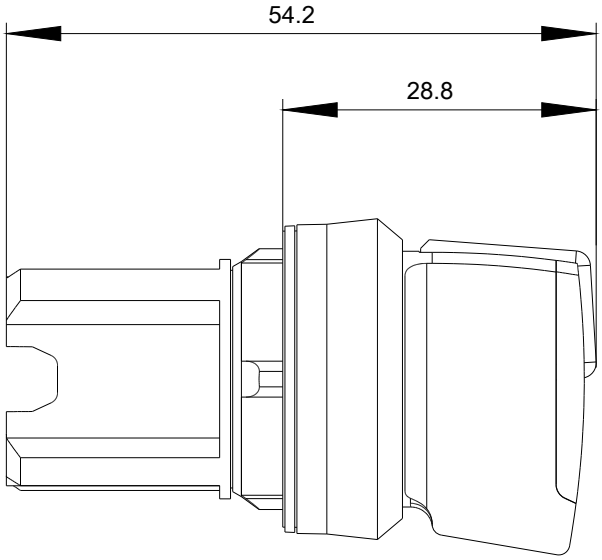

last modified: 04/04/2020

Subject to change without notice
© Copyright Siemens