BASIC M8



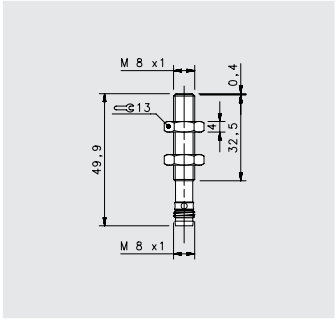

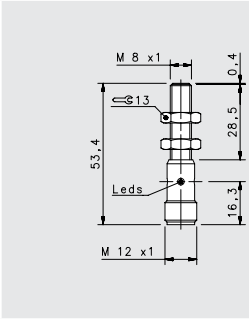

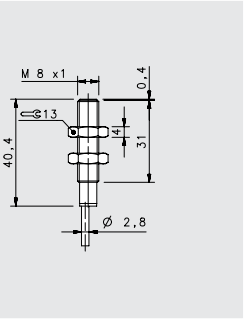

SHORT X2

FLUSH

				M8 conn	M12 conn	cable
NOMINAL SWITCHING DISTANCE				**2 mm**	**2 mm**	**2 mm**
10-30 Vdc	PNP/NPN NO-NC	4 wires	order No.	---	---	---
				---	---	---
10-30 Vdc	PNP NO	3 wires	order No.	IS-08-G1-S1	IS-08-G1-S2	IS-08-G1-03
				95B066850	95B066580	95B066370
10-30 Vdc	PNP NC	3 wires	order No.	IS-08-G2-S1	IS-08-G2-S2	IS-08-G2-03
				95B066880	95B066610	95B066390
10-30 Vdc	NPN NO	3 wires	order No.	IS-08-G3-S1	IS-08-G3-S2	IS-08-G3-03
				95B066800	95B066520	95B066330
10-30 Vdc	NPN NC	3 wires	order No.	IS-08-G4-S1	IS-08-G4-S2	IS-08-G4-03
				95B063131	95B066550	95B066350
10-30 Vdc	PNP NO-NC	4 wires	order No.	---	---	---
				---	---	---
10-30 Vdc	NPN NO-NC	4 wires	order No.	---	---	---
				---	---	---
10-30 Vdc	NO-NC	2 wires	order No.	---	---	---
				---	---	---
20-250 Vac/Vdc	NO	2 wires	order No.	---	---	---
				---	---	---
20-250 Vac/Vdc	NC	2 wires	order No.	---	---	---
				---	---	---
20-250 Vac	NO	2/3 wires	order No.	---	---	---
				---	---	---
10-30 Vdc	Analog 0-20 mA	3 wires	order No.	---	---	---
				---	---	---
NAMUR amplifier	NAMUR	2 wires	order No.	---	---	---
				---	---	---

Nominal Voltage	10-30 Vdc (-15/10%)	10-30 Vdc (-15/10%)	10-30 Vdc (-15/10%)
Residual Ripple	< 10%	< 10%	< 10%
Hysteresis	< 10%	< 10%	< 10%
Max. Output Current	200mA	200mA	200mA
Min. Output Current	---	---	---
Residual Current	< 10 mA	< 10 mA	< 10 mA
Voltage Drop	< 1,2 V (I=100mA)	< 1,2 V (I=100mA)	< 1,2 V (I=100mA)
Operation Led	Yellow	Yellow	Yellow
Switching Frequency	500 Hz	500 Hz	500 Hz
Start Up Delay	< 75 ms	< 75 ms	< 75 ms
Repeatability	< 3%	< 3%	< 3%
Short Circuit Protection	Present (self-resetting)	Present (self-resetting)	Present (self-resetting)
Electric Protection	Against polarity reversal inductive loads	Against polarity reversal inductive loads	Against polarity reversal inductive loads
Temperature Limit	(-25 ... +60 °C)	(-25 ... +60 °C)	(-25 ... +70 °C)
Protection Degree	IP67	IP67	IP67
Cable Length	---	---	2 m
Cable Section	---	---	3 x 0,14 mm²
Housing Material	Nickel-plated brass	Nickel-plated brass	Nickel-plated brass
Weight - Cable Output			80 g
Weight - Connector Output	35g	55g	---