Home distribution board DIDO-E

Technical data	
Degree of protection	IP 40*
Colour	white
Double insulation	⧈
Standard	IEC 62208, IEC 60670-1, IEC 60670-24
Installation temperature	-25° / +60°C
Glow wire test	650°C

*IP 30 for EC 1+1, 3+1, 3+2, ECGxxMEDIA

Number of N - PE terminals:

ECT/M8PT/PO	2x8…..8 PE / 8 N
ECT/M12PT/PO	2x10 10 PE / 10 N
ECT/M18PT/PO	2x13 13 PE / 13 N
ECT/M24PT/PO	2x13 13 PE / 13 N
ECT/M36PT/PO	2x15 15 PE / 15 N
ECT48PT/PO	2x20 20 PE / 20 N
ECT/M 2x18PT/PO	2x15 15 PE / 15 N
ECT/M 3x18PT/PO	2x25 25 PE / 25 N
ECG14	2x10 10 PE / 10 N
ECG28	2x13 13 PE / 13 N
ECG42	2x15 15 PE / 15 N
ECG56	2x20 20 PE / 20 N
ECG70	2x30 30 PE / 30 N
EC 1+1	-
EC 3+1	-
EC 3+2	2x4 4 PE / 4 N

- ECG14, ECG28, ECG42 have 1 additional free space to build in an extra PST-UNI terminal.
- ECG56 has 3 additional free spaces to build in up to 3 extra PST-UNI terminals.
- Double insulation not valid for ECG MEDIA

Surface mounted distribution board

type	Dimensions					Max. allowed power losses when Max. number of devices are installed
	A	B	C	D	E	Pde
ECT8PT/ECT8PO	236 mm	215 mm	112 mm	107 mm	108 mm	14W
ECT12PT/ECT12PO	236 mm	287 mm	112 mm	107 mm	180 mm	22W
ECT18PT/ECT18PT	236 mm	396 mm	112 mm	107 mm	289 mm	22W
ECT24PT/ECT24PO	361 mm	287 mm	112 mm	232 mm	180 mm	24W
ECT36PT/ECT36PO	482 mm	287 mm	112 mm	357 mm	180 mm	26W
ECT48PT/ECT48PO	652 mm	287 mm	112 mm	357 mm	180 mm	28W
ECT2x18PT/ECT2x18PO	361 mm	396 mm	112 mm	232 mm	289 mm	26W
ECT3x18PT/ECT3x18PO	526 mm	396 mm	112 mm	357 mm	289 mm	26W

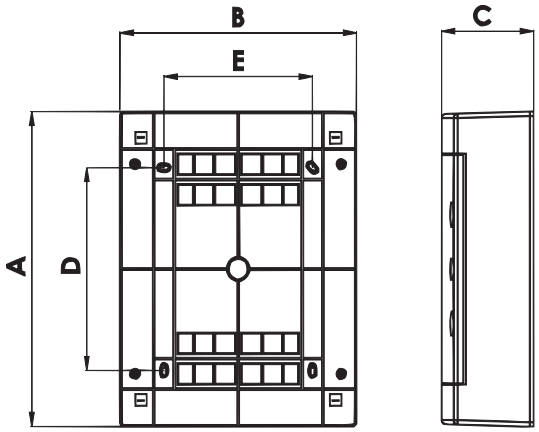

Flush mounted distribution board

type	Dimensions							Max. allowed power losses when Max. number of devices are installed
	A	B	C	D	E	F	G	Pde
ECM8PT/ECM8PO	212 mm	201 mm	68 mm	-	211 mm	232 mm	99 mm	14W
ECM12PT/ECM12PO	212 mm	273 mm	68 mm	-	283 mm	232 mm	106 mm	22W
ECM18PT/ECM18PO	212 mm	373 mm	68 mm	-	392 mm	232 mm	106 mm	22W
ECM24PT/ECM24PO	336 mm	273 mm	68 mm	125 mm	283 mm	357 mm	106 mm	24W
ECM36PT/ECM36PO	460 mm	273 mm	68 mm	125 mm	283 mm	482 mm	106 mm	26W
ECM2x18PT/ECM2x18PO	336 mm	373 mm	68 mm	125 mm	392 mm	357 mm	106 mm	26W
ECM3x18PT/ECM3x18PO	502 mm	373 mm	68 mm	125 mm	392 mm	522 mm	106 mm	26W

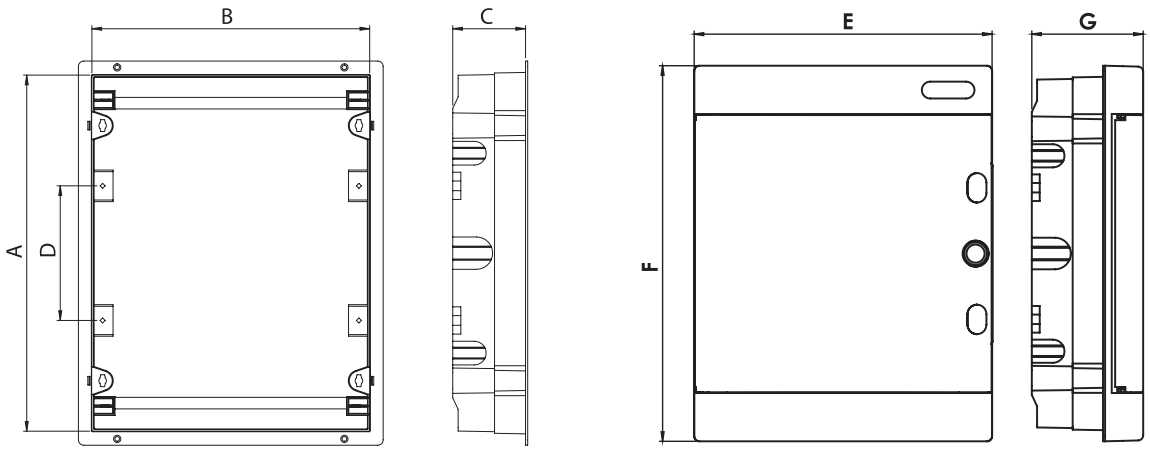

Flush mounted distribution board

type	Dimensions					Max. allowed power losses when Max. number of devices are installed
	A	B	C	H	W	Pde
ECG14	274 mm	306 mm	87 mm	317 mm	346 mm	31W
ECG28	399 mm	306 mm	87 mm	442 mm	346 mm	40W
ECG42	549 mm	306 mm	87 mm	592 mm	346 mm	50W
ECG56	673 mm	306 mm	87 mm	717 mm	346 mm	60W
ECG70	806 mm	317 mm	87 mm	842 mm	346 mm	60W

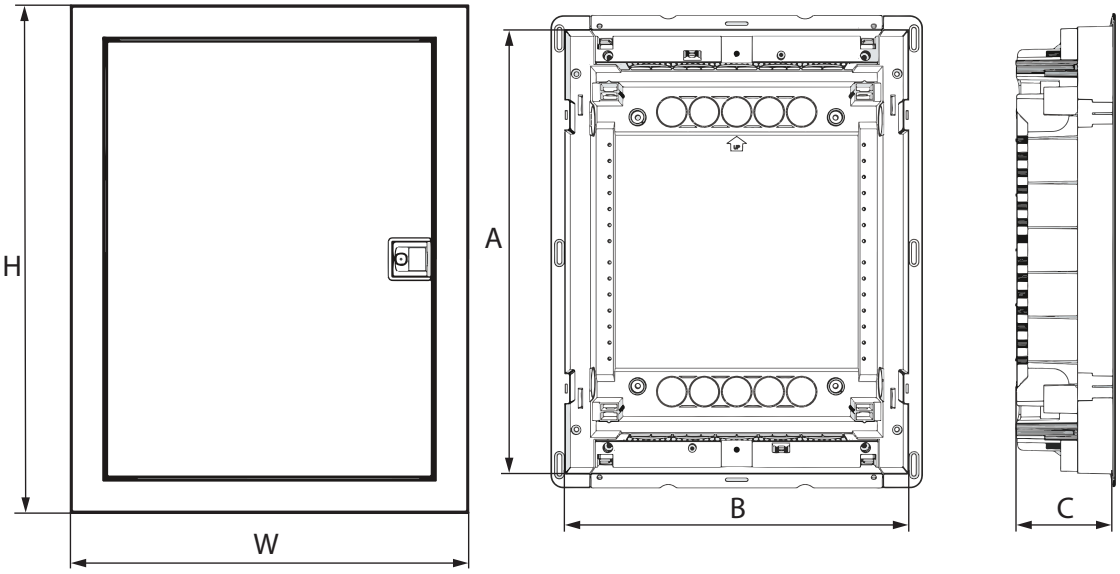

Surface mounted distribution board - IP30

type	Dimensions	Number of modules
EC 1+1	137 x 51 x 57	1 (+1)
EC 3+1	137 x 87 x 57	3 (+1)
EC 3+2	97 x 155 x 57	3 (+2)

ECG	
Material	Acrylonitrile butadiene styrene
Color	RAL9003
Door	Acrylonitrile butadiene styrene
Color	Transparent & white
Glow wire test	650°C
Terminal holder	Self extinguish material (Glow wire test: 960°C)
Temperature	-25°C ... +60°C
Rated voltage	AC400V
Standard	IEC60670
Halogen free	✓

ECG_H	
Material	Acrylonitrile butadiene styrene
Color	RAL9003
Door	Metal
Color	white
Glow wire test	850°C
Terminal holder	Self extinguish material (Glow wire test: 960°C)
Temperature	-25°C ... +60°C
Rated voltage	AC400V
Standard	IEC 60670-1, IEC 60670-24
Halogen free	✓

Advantages

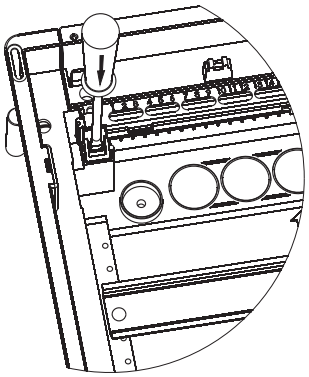

Easy terminal mounting

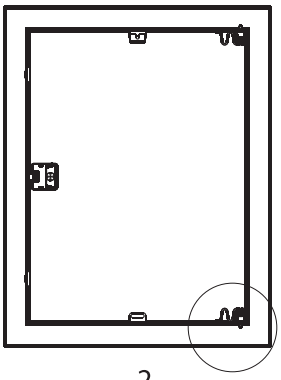

Left or right door mounting

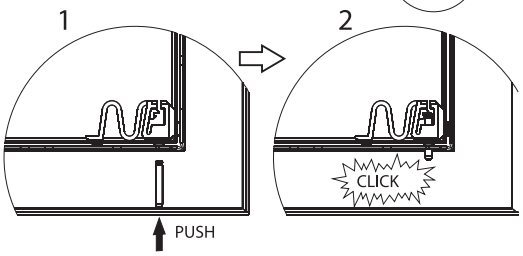

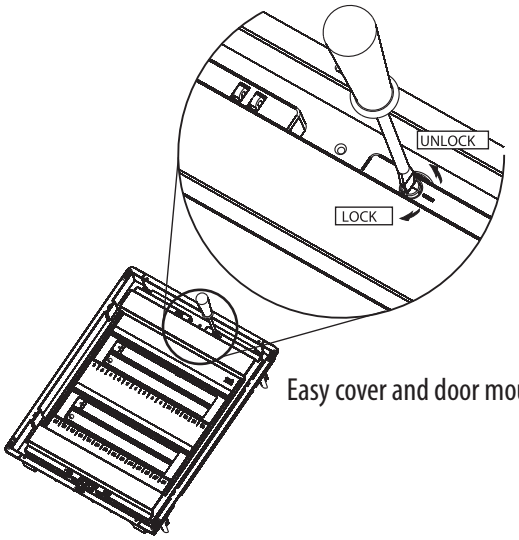

Easy cover and door mounting

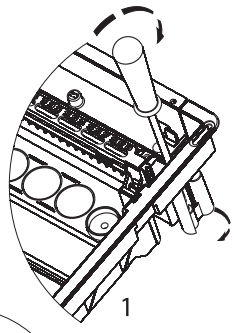

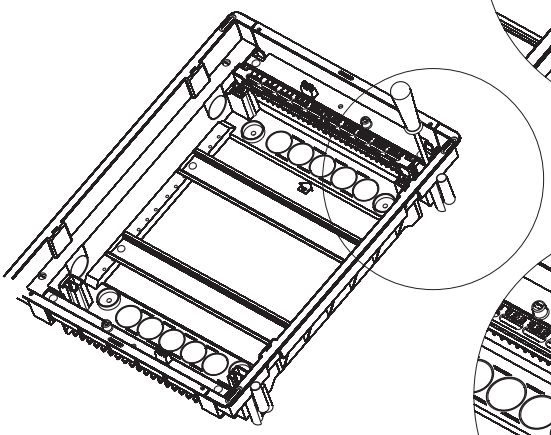

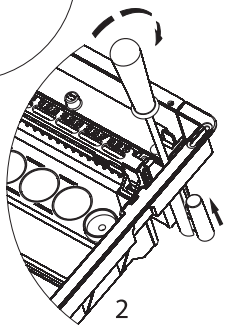

Holders for secure hollow wall installation

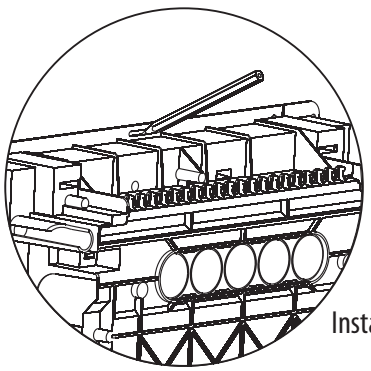

Installation marking slots for hollow walls

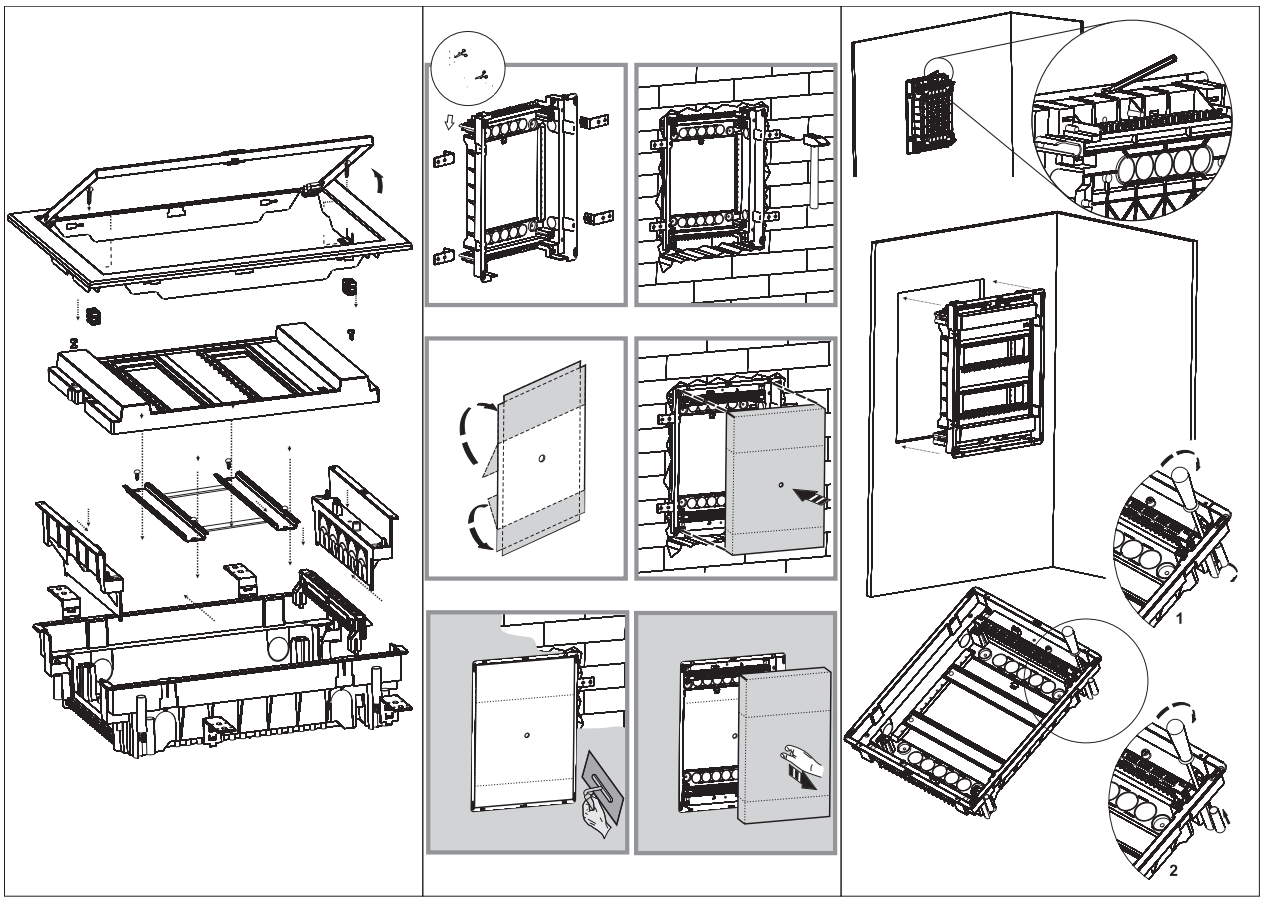

Flush mounted enclosures DIDO ERP

Part no.	Description
1	frame with doors
2	Plastic covers
3	TH set
4	PE/N terminals
5	bottom of enclosure
6	fixing elements

Glow wire test: 650°C

