Product description

Sensor/Actuator connector, angled socket, 4-pos., M12, A-coded, screw connection, metal knurl, cable screw connection Pg7



General properties

Ambient temperature	-40 to +85 °C
Protection degree	IP 67
Number of contacts	4
Outer diameter, cable	4.0 – 6.0 mm
Termination type	screw connection
Termination cross section, AWG	24 – 18
Termination cross section, mm²	0.25 – 0.75
Mating cycles	≥ 100

Electrical properties

Rated voltage	250 V
Contact resistance	≤ 8 mΩ
Insulation resistance	≥ 100 MΩ
Proof voltage, contact-contact	≥ 1.4 kV
Proof voltage, contact-housing	≥ 1.4 kV
Rated current	4 A
Overvoltage category	II
Pollution degree	3

Materials

Contact carrier	PA
Contact carrier, Inflammability class in accordance with UL 94	V0
Contacts, base material	CuZn
Contacts, surface	CuSnZn
Locking nut	Die-cast zinc, Ni plated
Grip body	PA
Sealing	NBR / FKM

Standards

Product standard	M12-Connector acc. to DIN EN 61076-2-101

We reserve all rights according to DIN ISO 16016.

MAST1 / 13.09.2019 / freigegeben

Drawings

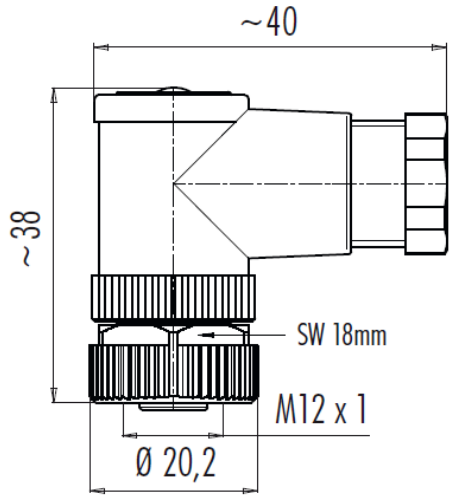

Pin assignment

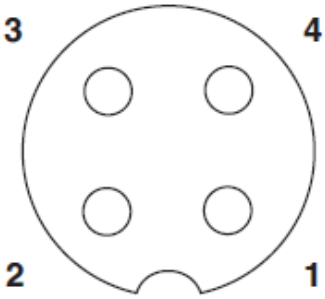

Assembly instruction

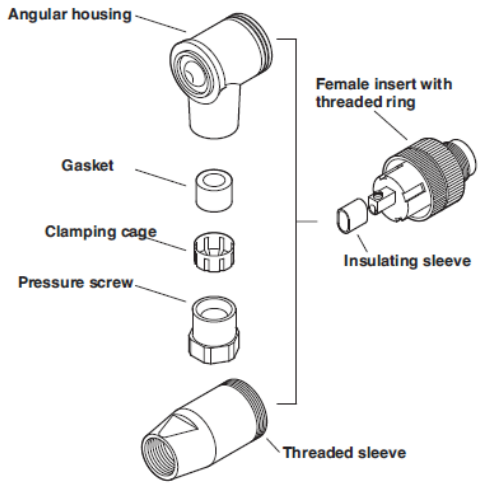

Application range

Automation, industrial machinery and plant engineering

Note

Photographs are not true to scale and do not represent detailed images of the respective products.

We reserve all rights according to DIN ISO 16016.

MAST1 / 13.09.2019 / freigegeben