Technical data sheet

Head plate, variable

Art.-Nr. 6348884



Head plate for the installation on US 3 supports and profile rails, type AML3518/AMS3518 and CML3518/CMS3518.

CE

A2	Stainless steel, rustproof
2B	Bright, reworked

Additional product text, instruction	The variable head plate can be mounted to fixed lengths of the U support, type US 3, or profile rails, type AML3518/AMS3518 and CML3518/CMS3518.

Master data

Item no.	6348884
Type	KU 3 V A2
Description 1	Head plate
Description 2	for US 3 and 3518, variable
Material	Stainless steel, material A2
Material symbol	A2
Surface	Bright, reworked
Surface symbol	2B
Smallest sales unit	1,00 Piece
Weight	40,00 kg/100 pc.

Technical data

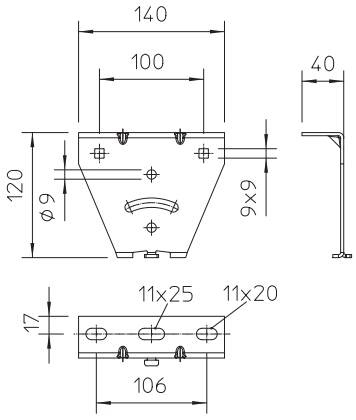

Version	Screw head plate
Suitable for ceiling fastening	☑
Suitable for maintaining electrical function	☐
Suitable for	U profile
Suitable for panel fastening	☐
Rustproof steel, pickled	☐
Angle range	90,00 - 90,00 °