TeSys DF, LS, GK
Fuse carriers

TeSys DF, LS, GK Fuse carriers

Type of product	Range		Pages
Introduction			B4/2
For protection of control circuits or transformer TeSys DF and accessories	Up to 25, 32, 50 or 125 A		B4/3
For protection of control circuits or transformer TeSys DF – For North American market	Up to 30 A		B4/5
For protection of motors or transformers TeSys LS, GK and accessories	Up to 25, 32, 50 A		B4/6
Technical Data for Designers			B4/9

Operation: safety

The fuse carrier performs two basic functions:
- it isolates the downstream circuit by means of a visible break and wide opening contacts,
- it holds the cartridge fuses designed to protect the installation against short-circuits.

The type of cartridge fuse needed to protect the circuit must be determined before selecting the fuse carrier.

Cartridge fuse selection (type, rating, size)

Type

Application	■ Motor protection. ■ Transformer protection.
Solution	■ **aM type** fuses. These fuses are designed to withstand high current peaks of a very short duration. They must be combined with a thermal overload relay coupled with a contactor.
Application	■ Lighting circuit protection. ■ Supply line protection. ■ Furnace protection.
Solution	■ **gG** type fuses, which are more widely used but whose limiting capacity is weaker than that of **aM** type fuses.

Rating

gG fuses
aM fuses

See standard NF C 15-100.
Table 53 A paragraph 532-2-1 and table 52 C paragraph 523-1.

Motors 3 x 220 V		Motors 3 x 400 V		Cartridge fuses type aM		Fuse carrier
P	in	P	in	Size	Rating	
kW	A	kW	A		A	
9	32	15	28.5	10 x 38	32	**LS1D32**
11	39	22	44	14 x 51	50	**GK1EK**
22	75	37	73	22 x 58	80	**GK1FK**

Size

Use the “fuse characteristics” table opposite to select the correct fuse size according to:
- the nominal current of the circuit to be protected,
- the operational voltage.

Fuse carrier selection

Application	**Isolation** of a circuit for safety reasons only.
Solution	The fuse carrier may be fitted with links. The maximum permissible current is indicated in the “pole characteristics” table opposite.
Application	**Isolation** of a circuit and its **protection** against short-circuits.
Solution	Select a fuse carrier according to: ■ the type of cartridge fuse required, ■ the maximum permissible current in the fuse carrier poles (see “pole characteristics” table opposite). If the operational current is greater than the maximum permissible current in the poles of the fuse carrier corresponding to the cartridge fuse size selected, select the fuse carrier the next size up. The **safety** provided by using a fuse carrier can be increased by adding a padlocking device with up to three padlocks.

Recommendations for use

The fuse carrier conforms to utilisation category AC-21A/22A of standard IEC 60947-3. It is therefore recommended that the fuse carrier early break auxiliary contacts always be inserted in the coil circuit of the contactor with which it is in series. If the fuse carrier is not associated with a contactor, it is essential to ensure that it will be operated off-load.

Fuse carriers
Ref.

Product references



DF101



DF103



DF141



DF143NC



DF221



DF223NC



DF101NV



DF103V



DF141NV



DF143VC



DF221NV



DF223VC

For protection of control circuits or transformers

Fuse carriers (1)

Conventional thermal current (Ith)	Size of cartridge fuse or link	Composition	Sold in lots of	Unit reference
A	mm			
25	8.5 x 32	1 P	12	**DF81**
		N	12	**DF10N**
		1 P + N (2)	6	**DF81N**
		2 P	6	**DF82**
		3 P	4	**DF83**
		3 P + N (2)	3	**DF83N**
32	10 x 38	1 P	12	**DF101**
		N	12	**DF10N**
		1 P + N (2)	6	**DF101N**
		2 P	6	**DF102**
		3 P	4	**DF103**
		3 P + N (2)	3	**DF103N**
50	14 x 51	1 P	6	**DF141**
		N	6	**DF14N**
		1 P + N (2)	3	**DF141N**
		2 P	3	**DF142**
		3 P	2	**DF143C** (3)
		3 P + N (2)	1	**DF143NC** (3)
125	22 x 58	1 P	6	**DF221**
		N	6	**DF22N**
		1 P + N (2)	3	**DF221N**
		2 P	3	**DF222**
		3 P	2	**DF223C** (3)
		3 P + N (2)	1	**DF223NC** (3)

Fuse carriers with "blown fuse" indicators (LED) (1) (4)

Conventional thermal current (Ith)	Size of cartridge fuse or link	Composition	Sold in lots of	Unit reference
A	mm			
25	8.5 x 32	1 P	12	**DF81V**
		1 P + N (2)	6	**DF81NV**
		2 P	6	**DF82V**
		3 P	4	**DF83V**
		3 P + N (2)	3	**DF83NV**
32	10 x 38	1 P	12	**DF101V**
		1 P + N (2)	6	**DF101NV**
		2 P	6	**DF102V**
		3 P	4	**DF103V**
		3 P + N (2)	3	**DF103NV**
50	14 x 51	1 P	6	**DF141V**
		1 P + N (2)	3	**DF141NV**
		2 P	3	**DF142V**
		3 P	2	**DF143VC** (3)
		3 P + N (2)	1	**DF143NVC** (3)
125	22 x 58	1 P	6	**DF221V**
		1 P + N (2)	3	**DF221NV**
		2 P	3	**DF222V**
		3 P	2	**DF223VC** (3)
		3 P + N (2)	1	**DF223NVC** (3)

(1) Each pole can be marked. A clip-in marker holder is provided for this purpose. Clip-in markers type AB1R● or AB1G● can also be used. DF8●●● and DF10●●● are pad lockable fuse carriers.
(2) N: neutral pole fitted with a locked tubular link as standard.
(3) A letter "C" in the reference indicates that the fuse carrier can be fitted with auxiliary early break, "blown fuse" signalling and "fuse present" signalling contacts.
(4) Operational voltage of the blown fuse indicator: 110 V...690 V.

Introduction: page B4/2
Characteristics: page B4/10
Dimensions: page B4/11
Schemes: page B4/11

Product references



DF14AM●



DF14AP

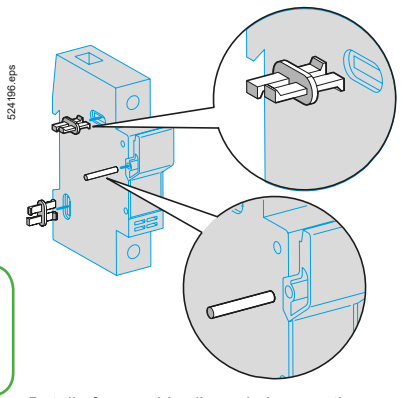

Detail of assembly clip and pin mounting

Accessories

Auxiliary early break and "blown fuse" signalling contacts (1)

Fuse carriers to be equipped	Size of cartridge fuse or link	Number of contacts	Sold in lots of	Unit reference
DF14 (3 P or 3 P + N)	14 x 51	1	1	**DF14AM1**
		2	1	**DF14AM2**
DF22 (3 P or 3 P + N)	22 X 58	1	1	**DF22AM1**
		2	1	**DF22AM2**

Fuse carrier assembly kits (2)

Fuse carriers to be assembled	Size of cartridge fuse or link	Composition	Sold in lots of	Unit reference
DF8	8.5 x 32	1 pin, 2 clips	12	**DF10AP**
DF10	10 x 38			
DF14	14 x 51	1 pin, 3 clips	10	**DF14AP**
DF22	22 x 58	1 pin, 3 clips	10	**DF22AP**

Marking accessories

Description	Composition	Marking	Sold in lots of	Unit reference
Clip-in markers	Strip of 10 identical numbers or letters	0…9	25	**AB1R●** (3)
		A…Z	25	**AB1G●** (3)

Substitution

Fuse carriers

Old range			New range	
Reference	Size of cartridge fuse or link	Composition	Reference w/o indicator	Reference with indicator
DF6AB08	8.5 x 32	1 P	**DF81**	**DF81V**
DF6AB10	10 x 38	1 P	**DF101**	**DF101V**
DF6N10	8.5 x 32 or 10 x 38	1 N	**DF10N**	**–**
GK1CC	8.5 x 32	1 P + N	**DF81N**	**DF81NV**
GK1CD	8.5 x 32	2 P	**DF82**	**DF82V**
GK1CF	8.5 x 32	3 P	**DF83**	**DF83V**
GK1CH	8.5 x 32	3 P + N	**DF83N**	**DF83NV**
GK1DC	10 x 38	1 P + N	**DF101N**	**DF101NV**
GK1DD	10 x 38	2 P	**DF102**	**DF102V**
GK1DF	10 x 38	3 P	**DF103**	**DF103V**
GK1DH	10 x 38	3 P + N	**DF103N**	**DF103NV**
GK1EB	14 x 51	1 P	**DF141**	**DF141V**
GK1EN	14 x 51	1 N	**DF14N**	**–**
GK1EC	14 x 51	1 P + N	**DF141N**	**DF141NV**
GK1ED	14 x 51	2 P	**DF142**	**DF142V**
GK1EF	14 x 51	3 P	**DF143C**	**DF143VC**
GK1EH	14 x 51	3 P + N	**DF143NC**	**DF143NVC**
GK1FB	22 x 58	1 P	**DF221**	**DF221V**
GK1FN	22 x 58	1 N	**DF22N**	**–**
GK1FC	22 x 58	1 P + N	**DF221N**	**DF221NV**
GK1FD	22 x 58	2 P	**DF222**	**DF222V**
GK1FF	22 x 58	3 P	**DF223C**	**DF223VC**
GK1FH	22 x 58	3 P + N	**DF223NC**	**DF223NVC**

Fuse carrier assembly kits

Old range		New range
Reference	Size of cartridge fuse or link	Reference
GK1AP2	8.5 x 32 or 10 x 38	**DF10AP**
GK1AP3	8.5 x 32 or 10 x 38	**DF10AP**
	14 x 51	**DF14AP**
GK1AP4	8.5 x 32 or 10 x 38	**DF10AP**
	22 x 58	**DF22AP**
GK1AP5	14 x 51	**DF14AP**
GK1AP6	14 x 51	**DF14AP**
	22 x 58	**DF22AP**
GK1AP9	22 x 58	**DF22AP**

(1) These auxiliary contacts provide the following functions: early break, "blown fuse" signalling (if the fuse carrier is fitted with striker fuses) and "fuse present" signalling.
(2) 1 pin and 2 clips are required to assemble two DF8 or DF10 fuse carriers together. 1 pin and 3 clips are required to assemble two DF14 or DF22 fuse carriers together.
*(3) When ordering, replace the ● in the reference with the number or letter required. Example: **AB1-R1** or **AB1-GA**.*

Introduction: page B4/2
Characteristics: page B4/10
Dimensions: page B4/11
Schemes: page B4/11

For protection of control circuits or transformers

References



DFCC1



DFCC3V

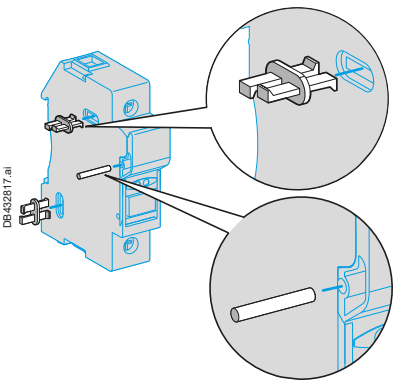

Detail of assembly clip and pin mounting

Fuse carriers (1)

Conventional thermal current (Ith)	Size of cartridge fuse or link	Composition	Sold in lots of	Unit reference
A				
30	Class CC	1 P	12	**DFCC1**
		2 P	12	**DFCC2**
		3 P	6	**DFCC3**

Fuse carriers with "blown fuse" indicators (LED) (1) (2)

Conventional thermal current (Ith)	Size of cartridge fuse or link	Composition	Sold in lots of	Unit reference
A				
30	Class CC	1 P	12	**DFCC1V**
		2 P	6	**DFCC2V**
		3 P	6	**DFCC3V**

Fuse carrier assembly kits (3)

Fuse carriers to be assembled	Size of cartridge fuse or link	Composition	Sold in lots of	Unit reference
DFCC	Class CC	1 pin, 2 clips	12	**DF10AP**

Marking accessories

Description	Composition	Marking	Sold in lots of	Unit reference
Clip-in markers	Strip of 10 identical numbers or letter	0…9	25	**AB1R●** (4)
		A…Z	25	**AB1G●** (4)

(1) Each pole can be marked. A clip-in marker holder is provided for this purpose. Clip-in markers type AB1R● or AB1G● can also be used. DFCC fuse holders are pad lockable.
(2) Operational voltage of the blown fuse indicator: 230 V...690 V.
(3) 1 pin and 2 clips are required to assemble two DFCC fuse carriers together.
*(4) When ordering, replace the p in the reference with the number or letter required. Example: **AB1R1** or **AB1GA**.*


PB111831.eps

LS1D323


PB111830.eps

LS1D32


PB121302.eps

GK1EK


PB111830.eps

LS1D32


PB121303.eps

+ LA8D324

For protection of motors or transformers

3-pole basic blocks

Connection by spring terminals

Rating	Cartridge fuse size	Number of early break contacts (1)	Single-phase protection device (2)	Reference (3)	Weight kg
25 A	10 x 38	– (4)	Without	**LS1D323**	0.270

Connection by screw clamp terminals or connectors

32 A	10 x 38	– (4)	Without	**LS1D32**	0.300
50 A	14 x 51	1	Without	**GK1EK**	0.430
			With	**GK1EV**	0.470
		2	Without	**GK1ES**	0.470
			With	**GK1EW**	0.510

4-pole basic blocks

Connection by screw clamp terminals or connectors

32 A	10 x 38	– (4)	Without	**LS1D32 + LA8D324** (5)	0.300
50 A	14 x 51	1	Without	**GK1EM**	0.570
			With	**GK1EY**	0.600
		2	Without	**GK1ET**	0.610
			With	**GK1EX**	0.650

Fuse carriers for the North American market

25 and 30 A basic blocks: please consult your Regional Sales Office.

(1) With 1 or 2 early break contacts to be inserted in the contactor control circuit.
(2) Fuse carriers with single-phase protection device must be fitted with striker fuses.
(3) LS1D: clips directly onto a 35 mm ⊔ rail or screw fixing.
GK1: clips directly onto a 35 mm ⊔ rail or Telequick mounting plate.
(4) Addition of add-on contact block, see page B4/7.
(5) Can be mounted on left-hand or right-hand side of the basic block.

Fuse carriers

Product references

PG112152.eps



GK1AP05

Add-on contact blocks

Description	For use on	Mounting	Maximum number	Type of contacts	Sold in lots of	Unit reference
Instantaneous auxiliary contacts (early break contacts)	LS1D32	Front	1	N/O + N/C	10	**GVAE11**
				N/O + N/O	10	**GVAE20**
	LS1D323	Front	1	N/O + N/C	10	**GVAE113**
				N/O + N/O	10	**GVAE203**

Operators

For fuse carrier		For mounting on	Reference
Rating	Number of poles		
Side handles			
125 A	3 or 4	Right-hand side	**GK1AP07**
		Left-hand side	**GK1AP08**
Front handles (1)			
32 - 50 - 125 A			Fitted as standard
External handles			
32 A	3 or 4	Right-hand side (IP54)	**LS1D32005** (2)
		Left-hand side (IP54)	**LS1D32006**
50 A	3 or 4	Right-hand side	**GK1AP05**
		Left-hand side	**GK1AP06**

Padlocking devices (3)

For fuse carrier			Reference
Rating	Number of poles	Single-phase protection device	
32 A	3 or 4	Without	integral
50 A	3	Without	**GK1AV07**
		With	**GK1AV08**
	4	Without	**GK1AV08**
		With	**GK1AV09**

Links

Tubular links

For fuse carrier		Sold in lots of	Unit reference
Rating	Number of poles		
32 A	3 or 4	10	**DK1CB92** (4)
50 A	3 or 4	10	**DK1EB92** (5)
125 A	3 or 4	10	**DK1FA92** (5)

(1) Fitted as standard on 32, 50 and 125 A fuse carriers type GK1.
*(2) Reference **LS1D32005** replaces reference DK1FB005.*
*(3) For the 125 A rating, use side handles **GK1AP07** or **GK1AP08**.*
*(4) For use on a neutral circuit, the tubular link can be interlocked with special device **LA8D25906** (sold in lots of 10).*
(5) 50 A fuse carriers type GK1 are fitted with an interlocked neutral tubular link as standard.

Product references

Accessories for LS1D32 (screw clamp terminals)

Description	Application	Sold in lots of	Unit reference
Plate for mounting	LS1D32 and contactor LC1D09...D38 with front faces aligned	1	**LAD311**
Combination blocks	Between LS1D32 and contactor LC1K or LP1K	10	**GV2AF01**
	Between LS1D32 and contactor LC1D09...D38	10	**GV2AF3**
	Between LS1D32 mounted on LAD311 and contactor LC1D09...D38	10	**GV2AF4**

Description	Application	Pitch mm	Reference
Sets of 3-pole 63 A busbars	2 tap-offs	45	**GV2G245**
		54	**GV2G254**
		72	**GV2G272**
	3 tap-offs	45	**GV2G345**
		54	**GV2G354**
	4 tap-offs	45	**GV2G445**
		54	**GV2G454**
		72	**GV2G472**
	5 tap-offs	54	**GV2G554**

Description	Application	Sold in lots of	Unit reference
Protective end cover	For unused busbar outlets	5	**GV1G10**
Terminal block Connection from the top	For supply to one or more GV2G busbar sets	1	**GV1G09**
Cover for terminal block	For mounting in modular panels	10	**LA9E07**
Padlocking device	For use with up to 4 padlocks (not supplied) Ø6 mm shank max	1	**GV2V03**

Accessories for LS1D323 (spring terminals)

Description	Application	Reference
Plate for mounting	LS1D323 and contactor LC1D09...D38 with front faces aligned	**LAD311**

Description	Extension by	Number of starters	Reference
Power splitter box, 63 A	LAD32●	2	**LAD322**
		4	**LAD324**

Description	Kit contents	Reference
Assembly and power connection kit for LS1D323 and LC1D093...D323	1 LAD311 plate for mounting LS1D323 2 LAD341 power connection modules - between LS1D323 and power splitter box - between LS1D323 and contactor	**LAD352**

Description	Maximum capacity	Application	Sold in lots of	Unit reference
Upstream terminal block	16 mm²	Power supply to 1 or 2 power splitter boxes	1	**LAD3B1**
Downstream terminal block	16 mm²	Connection of motor cables	1	**LAD331**
Cable end reducer	–	For connection of conductors from 1 to 1.5 mm²	20	**LAD99**

Fuse carriers

Introduction: page B4/2
Characteristics : page B4/14
Dimensions : page B4/15
Schemes : page B4/16

TeSys DF, LS, GK Fuse carriers

Technical Data for Designers

Contents

TeSys DF:
> Characteristics B4/10
> Dimensions and schemes B4/11
TeSys DF for the North American market:
> Characteristics B4/12
> Dimensions and schemes B4/13
TeSys LS and GK:
> Characteristics B4/14
> Dimensions..... B4/15
> Schemes B4/16

Characteristics

Environment characteristics

Fuse carrier type			DF8	DF10	DF14	DF22
Conforming to standards			IEC/EN 60947-3, IEC/HD 60269-2	IEC/EN 60947-3 (1), IEC/HD 60269-2, R22HL2, UL 4248-1 (2), CSA C22.2 No 4248-1 (2)	IEC/EN 60947-3, UL 4248-1, CSA C22.2 No 4248-1	
Product certification			IEC, EAC, DNV-GL, CCC	IEC, UL, CSA, EAC, DNV-GL, CCC	IEC, UL, CSA, EAC	
Degree of protection	Conforming to IEC 60529		IP 20			
Ambient air temperature	Storage	**°C**	-40…+80			
	For operation, with derating (1)	**°C**	-20…+60			
Operating positions			± 23° in relation to normal mounting plane			
Flame resistance	Conforming to IEC 60695-2-1	**°C**	960			

Pole characteristics

Fuse size		**mm**	8.5 x 32		10 x 38		14 x 51	22 x 58	
Rated insulation voltage (Ui) with tubular links, a.c. or D.C. supply		**V**	500		690		690	690	
Rated impulse withstand voltage (Uimp)		**kV**	6		6		8	8	
Conventional thermal current (Ith) for ambient air temperature ≤ 20 °C (3)									
	With tubular links	**A**	25		32		50	125	
	With aM cartridge fuses	**A**	25		32		50	125	
	With gG cartridge fuses	**A**	25		32		50	100	
Rated conditional short-circuit current Conforming to IEC 60947-3									
	400 V	**kA**	20		120		120	120	
	500 V	**kA**	–		120		120	120	
	690 V	**kA**	–		–		80	80	
Peak withstand current (dynamic stress) Conforming to IEC 60269-1									
	With tubular links	**kA**	11		15		15	19	
Cabling (number of conductors x c.s.a.)			**Min.**	**Max.**	**Min.**	**Max.**	**Min.**	**Max.**	**Min.**	**Max.**
	Solid cable	**mm²**	1 x 1.5	1 x 16 2 x 6	1 x 1.5	1 x 16 2 x 6	1 x 2.5	1 x 25 2 x 10	1 x 2.5	1 x 35 2 x 25
	Flexible cable without cable end	**mm²**	1 x 1.5	1 x 10 2 x 6	1 x 1.5	1 x 10 2 x 6	1 x 2.5	1 x 25 2 x 10	1 x 2.5	1 x 35 2 x 16
	Flexible cable with cable end	**mm²**	1 x 1.5	1 x 10 2 x 6	1 x 1.5	1 x 10 2 x 6	1 x 2.5	1 x 25 2 x 10	1 x 2.5	1 x 35 2 x 16
Tightening torque		**Nm**	2.2				3.5	4	

Characteristics of early break and signalling contacts DF14 AM and DF22 AM

Rated insulation voltage (Ui) a.c. supply		**V**	250			
Conventional thermal current (Ith) for ambient air temperature ≤ 20 °C (1)		**A**	5			
Rated operational current			**24 V**	**48 V**	**127 V**	**240 V**
	Category AC-15	**A**	4	4	3	2.5
	Category DC-13	**A**	3	1	0.2	0.1
Definition of rated characteristics	Conforming to IEC 60947-5-1		B300			
Low load operating characteristics	Minimum voltage	**V**	10			
	Minimum current	**mA**	30			
Cabling			Faston connectors			

(1) DF101PV excluded.

(2) DF101PV add UL/CSA 4248-19.

(3) For use in an installation with ambient temperature > 20 °C, apply a derating coefficient:

Maximum temperature	20 °C	30 °C	40 °C	50 °C	60 °C
Max. relative humidity	95 %	90 %	80 %	50 %	50 %
Current derating coefficient	1	0.95	0.9	0.8	0.7

Number of poles (each side)	1 to 3	4 to 6	≥7
Current derating coefficient	1	0.95	0.9

Introduction: page B4/2
References: pages B4/3 and B4/4
Dimensions: page B4/11
Schemes: page B4/11

Life Is On Schneider Electric

Dimensions, schemes

Dimensions

Modular fuse carriers 25 A and 32 A

Mounting on 35 mm ⊔ rail

DF81 and DF81V DF101 and DF101V DF10N	DF81N and DF81NV DF82 and DF82V DF101N and DF101NV DF102 and DF102V	DF83 and DF83V DF103 and DF103V	DF83N and DF83NV DF103N and DF103NV

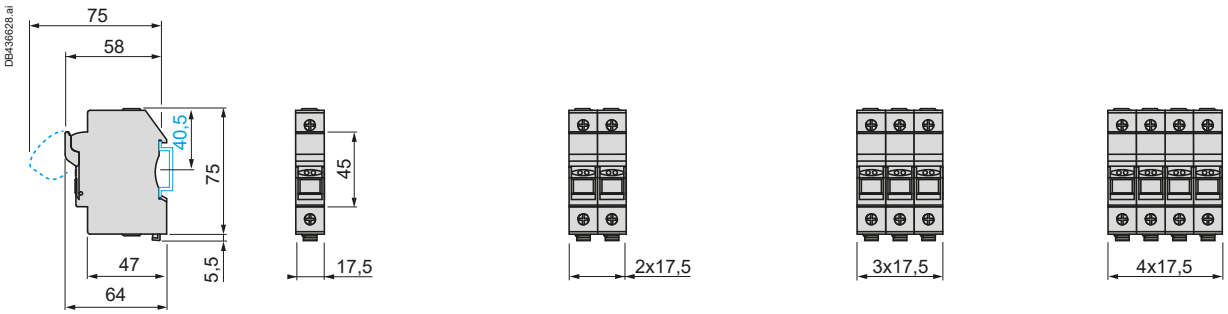

Modular fuse carriers 50 A

Mounting on 35 mm ⊔ rail

DF141 and DF141V DF14N	DF141N and DF141NV DF142 and DF142V	DF143C and DF143VC	DF143NC and DF143NVC

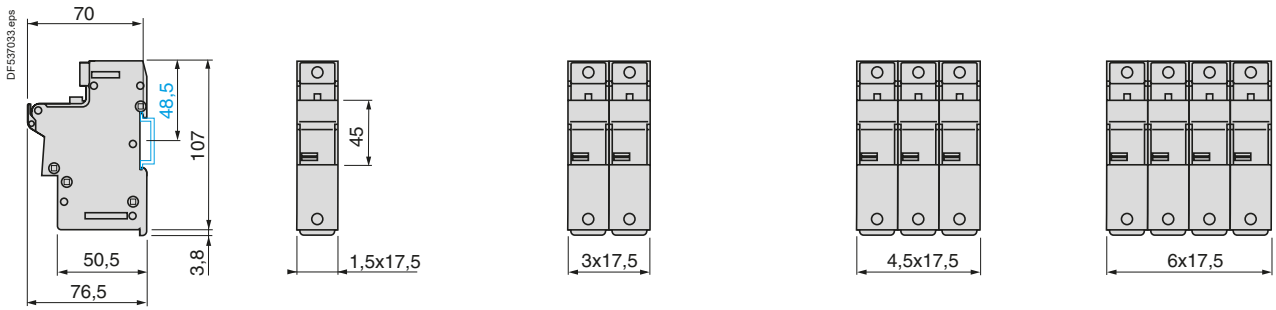

Modular fuse carriers 125 A

Mounting on 35 mm ⊔ rail

DF221 and DF221V DF22N	DF221N and DF221NV DF222 and DF222V	DF223C and DF223VC	DF223NC and DF223NVC

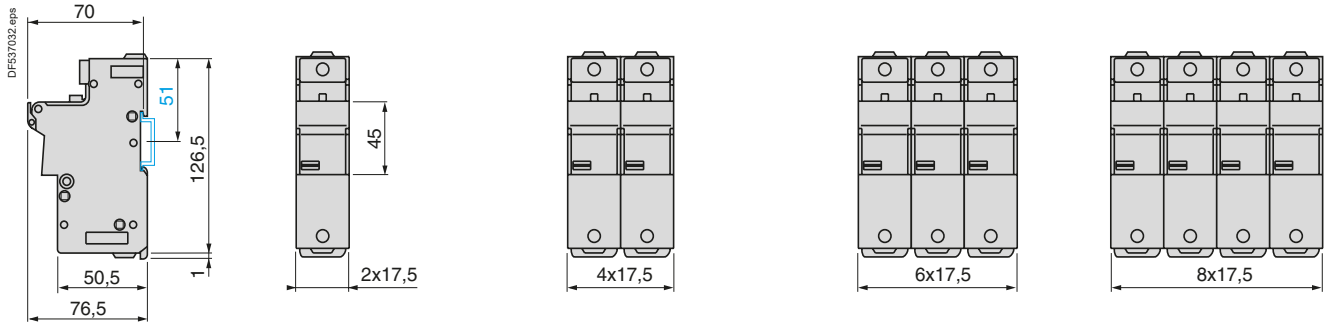

Schemes

Modular fuse carriers

DF•1P

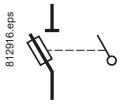

DF•N

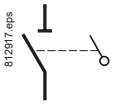

DF•1P + N

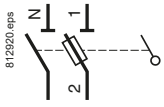

DF•2P

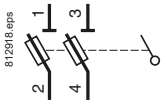

DF•3P

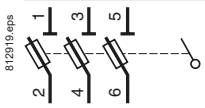

DF•3P + N

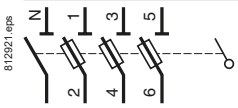

Introduction: page B4/2
References: pages B4/3 and B4/4
Characteristics: page B4/10