SIEMENS

Product data sheet 3RH2921-1DA02

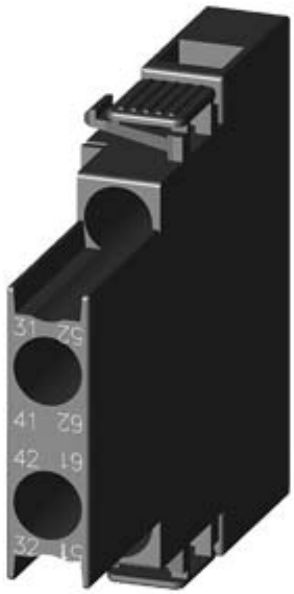

LATERAL AUX.SWITCH BLOCK,SIDE, 2NC,
CURR.PATH: 1NC, 1NC,
FOR MOTOR CONTACTORS, SZ S0,
SCREW TERMINAL R: 31/32,
41/42 L: 51/52, 61/62

General technical data:		
product brand name		SIRIUS
Acceptability for application		Contactor relay and power contactor
Protection class IP / on the front		IP20
Ambient temperature		
• during storage	°C	-55 … +80
• during operating	°C	-25 … +60
Mechanical operating cycles as operating time		
• typical		10,000,000
Electrical operating cycles as operating time / at AC-15 / at 230 V		
• typical		200,000
Contact reliability		one incorrect switching operation of 100 million switching operations (17 V, 1 mA)
Contact reliability / of the auxiliary contacts		1 faulty switching per 100 million (17 V, 1 mA)
Insulation voltage / with degree of pollution 3		
• rated value	V	690
Impulse voltage resistance		
• rated value	kV	6

Auxiliary circuit:

© Copyright Siemens AG 2012

Number of NC contacts / for auxiliary contacts / instantaneous switching		2
Number of NO contacts / for auxiliary contacts / instantaneous switching		0
Operating current / of the auxiliary contacts / at AC-12		
• at 24 V	A	10
• at 230 V	A	10
• at 400 V	A	10
• at 690 V	A	10
• maximum	A	10
Operating current / of the auxiliary contacts / at AC-14		
• at 125 V	A	6
• at 250 V	A	6
Operating current / of the auxiliary contacts / at AC-15		
• at 24 V	A	6
• at 230 V	A	6
• at 690 V	A	1
• at 400 V	A	3
Operating current		
• with 2 current paths in series / at DC-12		
• at 24 V / rated value	A	10
• at 60 V / rated value	A	10
• at 110 V / rated value	A	4
• at 220 V / rated value	A	2
• at 440 V / rated value	A	1.3
• at 600 V / rated value	A	0.65
• with 3 current paths in series / at DC-12		
• at 24 V / rated value	A	10
• at 60 V / rated value	A	10
• at 110 V / rated value	A	10
• at 220 V / rated value	A	3.6
• at 440 V / rated value	A	2.5
• at 600 V / rated value	A	1.8
Operating current		
• of the auxiliary contacts / at DC-13		
• at 24 V	A	6
• at 60 V	A	2
• at 110 V	A	1
• at 220 V	A	0.3
• with 2 current paths in series / at DC-13		

© Copyright Siemens AG 2012

• at 24 V / rated value	A	10
• at 60 V / rated value	A	3.5
• at 110 V / rated value	A	1.3
• at 220 V / rated value	A	0.9
• at 440 V / rated value	A	0.2
• at 600 V / rated value	A	0.1
• with 3 current paths in series / at DC-13		
• at 24 V / rated value	A	10
• at 60 V / rated value	A	4.7
• at 110 V / rated value	A	3
• at 220 V / rated value	A	1.2
• at 440 V / rated value	A	0.5
• at 600 V / rated value	A	0.26

Installation/mounting/dimensions:

Type of mounting		snap-on mounting
Width	mm	10
Height	mm	57.4
Depth	mm	66

Connections:

Design of the electrical connection		
• for auxiliary and control current circuit		screw-type terminals
Type of the connectable conductor cross-section		
• for auxiliary contacts		
• solid		2x (0.5 ... 1.5 mm²), 2x (0.75 ... 2.5 mm²)
• finely stranded		
• with conductor end processing		2x (0.5 ... 1.5 mm²), 2x (0.75 ... 2.5 mm²)
• for AWG conductors / for auxiliary contacts		2x (20 ... 16), 2x (18 ... 14)

Safety:related Parameter:

Product function / mirror contact to IEC 60947-4-1		Yes
• comment		with 3RT2
Product function / positively driven operation to IEC 60947-5-1		No

Certificates/approvals:

© Copyright Siemens AG 2012

General Product Approval				Test Certificates
CQC	CSA	ROSTEST	UL	Manufacturer

Shipping Approval					
ABS	DNV	GL	LRS	PRS	RINA

Shipping Approval	other
RMRS	VDE

Further information:

Information- and Downloadcenter (Catalogs, Brochures,…)
http://www.siemens.com/industrial-controls/catalogs

Industry Mall (Online ordering system)
http://www.siemens.com/industrial-controls/mall

Cax online generator:
http://www.siemens.com/cax

Service&Support (Manuals, Certificates, Characteristics, FAQs,...)
http://support.automation.siemens.com/WW/view/en/3RH2921-1DA02/all

Image database (product images, 2D dimension drawings, 3D models, device circuit diagrams, ...)
http://www.automation.siemens.com/bilddb/cax_en.aspx?mlfb=3RH2921-1DA02

© Copyright Siemens AG 2012

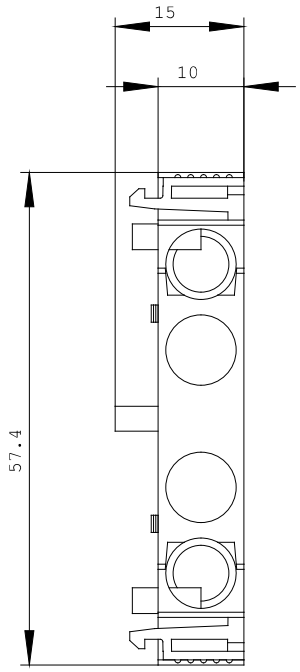

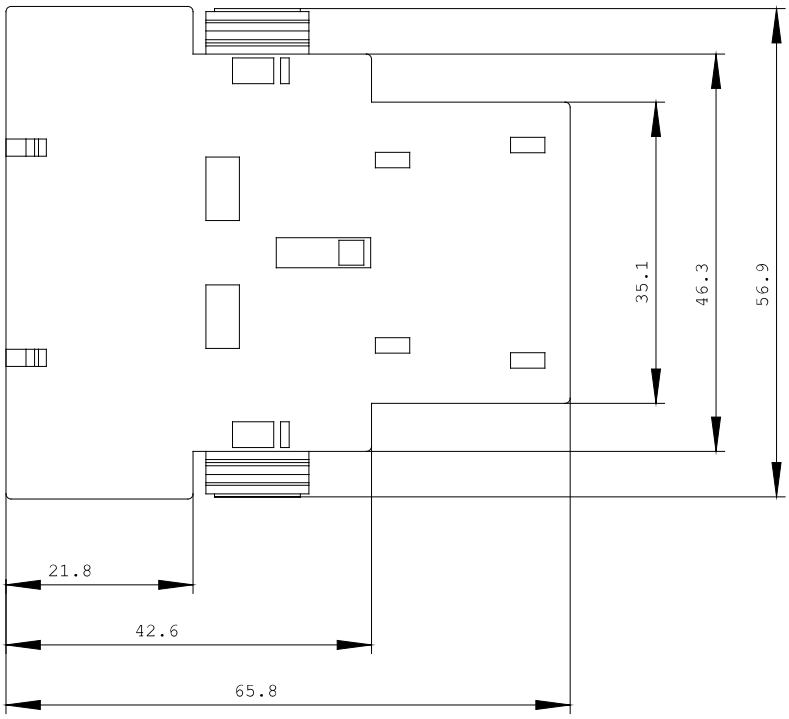

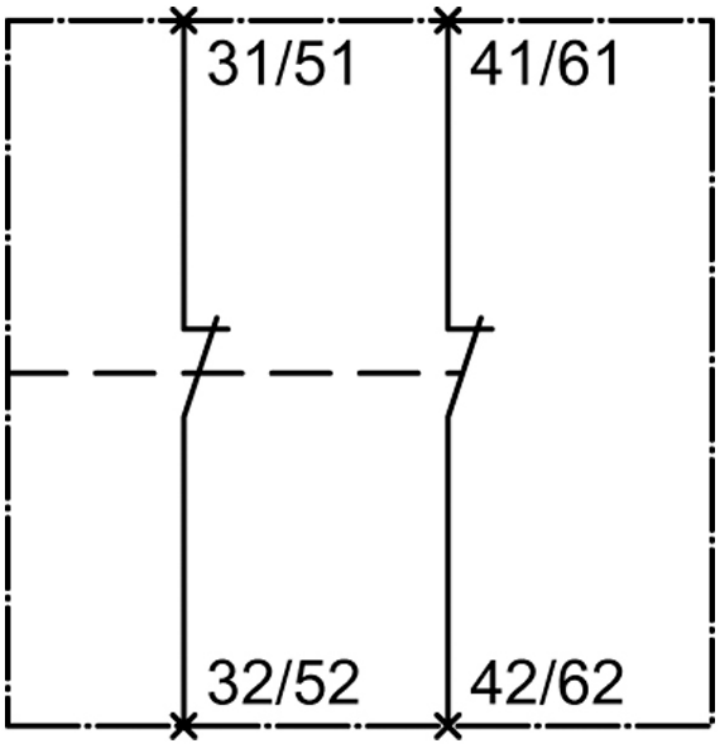

last change: Jan 30, 2012

© Copyright Siemens AG 2012