Obudowy i skrzynki rozdzielcze
Housing and distributing boards, distribution box

Obudowy typu S
Housing, S-type

PC szybka / ABS obudowa

Norma / norm: PN-EN 62208

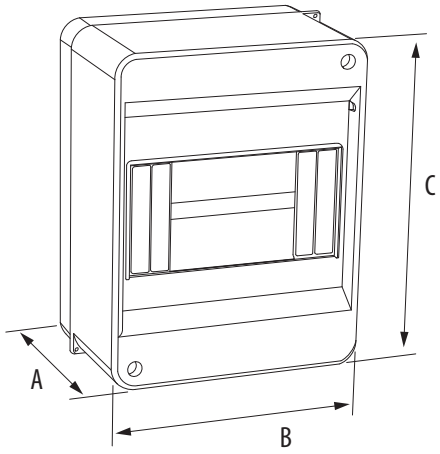

Obudowa S-8
Housing S-8



C.2068 — C.2017 (N+PE) — IP40

A	B	C		#
66mm	165mm	140mm	8	6

Uwagi / remarks: Obudowa S- 8 C.2017 zawiera złącze N+PE
S-8 C.2017 Housing with N+PE terminal strips inside

Obudowa S-8 z szybką dymną
Housing S-8 with smoky glass



C.2069 — C.2025 (N+PE) — IP40

A	B	C		#
83mm	165mm	140mm	8	6

Uwagi / remarks: Obudowa S-8 C.2025 zawiera złącze N+PE
S-8 C.2025 Housing with N+PE terminal strips inside

Maskownica modułów obudowy S-12
Cover for housing S-12

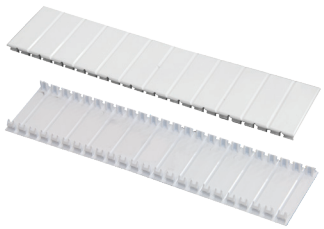

C.2080

A	B	C	ABS	#
52mm	219mm	9,65mm		10

Uwagi / remarks:

Obudowa S-12
Housing S-12



C.2070 — C.2071 (N+PE) — IP40

A	B	C		#
80mm	240mm	140mm	12	1

Uwagi / remarks: Obudowa S- 12 C.2071 zawiera złącze N+PE
S-12 C.2071 Housing with N+PE terminal strips inside

Obudowa S-12 z szybką dymną
Housing S-12 with smoky glass



C.2072 — C.2073 (N+PE) — IP40

A	B	C		#
96mm	240mm	140mm	12	1

Uwagi / remarks: Obudowa S-12 C.2073 zawiera złącze N+PE
S-12 C.2073Housing with N+PE terminal strips inside