GLC0160C1

3 polowy rozłącznik w układzie przełącznym wg IEC/EN, 160A

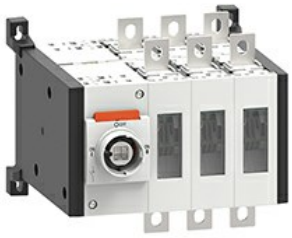

Product designation			Changeover Switch
Product type designation			GLC
Number of poles		nr.	3
Operating voltage type			AC
Contact characteristics			
IEC Conventional free air thermal current Ith		A	160
Rated insulation voltage Ui IEC/EN		V	1000
Rated impulse withstand voltage Uimp		kV	12
Operating current Ie			
AC31B			
	400V	A	160
	500V	A	160
	690V	A	160
AC32B			
	400V	A	160
	500V	A	160
	690V	A	160
AC33B			
	400V	A	160
	500V	A	160
	690V	A	160
Power dissipation per pole max		W	3.2
Rated operational power AC23A			
	400V	kW	90
	690V	kW	144
Reactive power for control of capacitors at			
Rated short time current (1s) Icw (rms)		kA	8
Conditional short-circuit current (rms)		kA	100
Short-circuit protection with fuse		Class/A	gG/160
Making capacity AC23A 400V		A	1600
Breaking capacity AC23A 400V		A	1280
Mechanical life		cycles	20000
Mechanical features			
Operating position			
	normal		Vertical plan
	allowable		Any
Fixing			Screw
Terminals			
	type		M8 x 20
Tightening torque for terminals			
	min	Nm	15
	max	Nm	22
	min	lbin	132
	max	lbin	194

The characteristics described in this document are subject to updates or modifications at any time. The descriptions, technical and functional information, illustrations and instructions in this brochure are purely illustrative, and are consequently not contractually binding

GLC0160C1

3 polowy rozłącznik w układzie przełącznym wg IEC/EN, 160A

Conductor section

	IEC min	mm²	70
	IEC max	mm²	185
	AWG/kcmil min		00
	AWG/kcmil max		400

Ambient conditions

Operating temperature

	min	°C	-25
	max	°C	+55

Storage temperature

	min	°C	-40
	max	°C	+70

Max altitude		m	3000

Dimensions

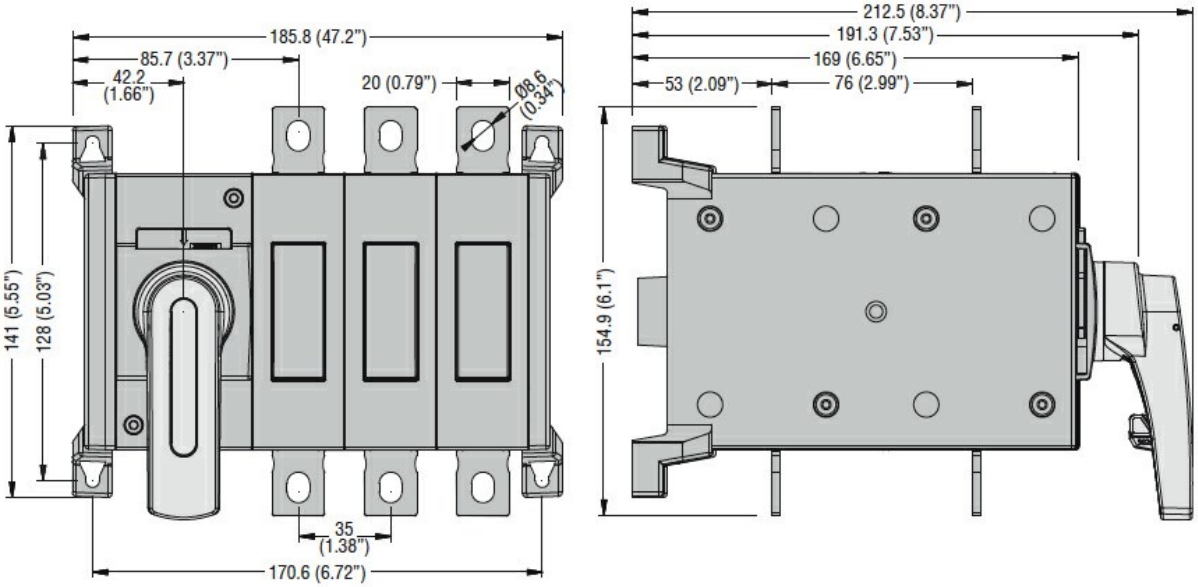

Wiring diagrams

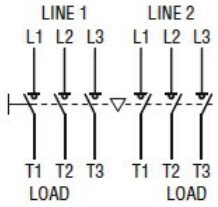

Certifications and compliance

Compliance

IEC/EN 60947-1
IEC/EN 60947-3

ETIM 6 classification

EC000066 - Power contactor, AC switching

The characteristics described in this document are subject to updates or modifications at any time. The descriptions, technical and functional information, illustrations and instructions in this brochure are purely illustrative, and are consequently not contractually binding