KBE2L11

Wyłącznik krańcowy serii K, zestyki 1NO+1NC wolnoprzełączające. Rolka metalowa.



Product designation			Limit switches - Roller lever plunger
Product type designation			KBE
General characteristics			
Material			
	Housing		Self-extinguishing double-insulation polymer thermoplastic
	Roller		Metal
Contact characteristics			
Type of contact			1NO+1NC Slow break
Thermal current Ith		A	10
IEC/EN 60947-5-1 designation			A600 Q300
Rated insulation voltage Ui		V	690
Rated impulse withstand voltage Uimp		kV	6
Insulation class			II
Short-circuit protection with fuse		Class/A	10 gG/SC QUICK FUSE
Switching speed			
	min	m/s	0.5
	max	m/s	1.5
IEC Conventional free air thermal current Ith		A	10
Resistance per pole (average value)		mΩ	<10
Mechanical features			
Operating head fixing			Locking bayonet insert
Operating torque			
		Ncm	3
		ozin	4.25
Tightening torque (Max)			
Switch fixing			
		Nm	2.5
		lbin	22.1
Contact terminals			
		Nm	0.8
		lbin	7
Body lid screw fixing			
		Nm	0.8
		lbin	7
Conductor section			
AWG/Kcmil			
	min		16
	max		14

The characteristics described in this document are subject to updates or modifications at any time. The descriptions, technical and functional information, illustrations and instructions in this brochure are purely illustrative, and are consequently not contractually binding

	IEC			
		min	mm²	1or 2
		max	mm²	2.5
Cable connection				Self-releasing screw terminal
Cable entry				M20 on the bottom
Operations				
Mechanical life			cycles	<10000000
Mechanical operation			cycles/h	3600
Ambient conditions				
Temperature				
	Operating temperature			
		min	°C	-25
		max	°C	+70
	Storage temperature			
		min	°C	-40
		max	°C	+70
Resistance & Protection				
IP degree				
		Terminals		IP20
		Body housing		IP65
Pollution degree				3
Dimensions				

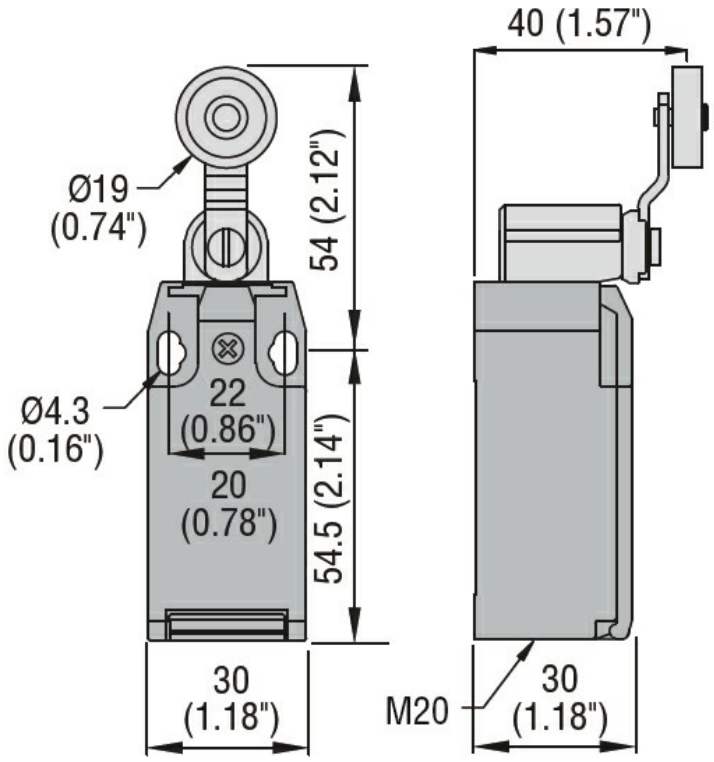

Wiring diagrams

The characteristics described in this document are subject to updates or modifications at any time. The descriptions, technical and functional information, illustrations and instructions in this brochure are purely illustrative, and are consequently not contractually binding

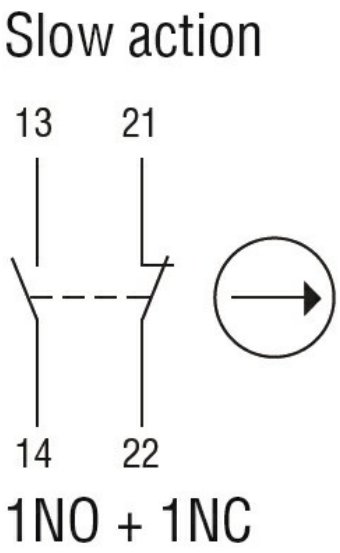

Certifications and compliance

Compliance	
	CSA C22.2 n° 14
	EN 50047
	IEC/EN 60204-1
	IEC/EN 60947-1
	IEC/EN 60947-5-1
	UL508
Certificates	
	CCC
	cULus
	EAC

The characteristics described in this document are subject to updates or modifications at any time. The descriptions, technical and functional information, illustrations and instructions in this brochure are purely illustrative, and are consequently not contractually binding