Technical data sheet

Spacer clip 733 ALU

Art.-Nr. 1362822



Steel bolt material.
*Size M16 is not suitable for nail guns.
*Sizes M16 - PG16 not suitable for bolt-firing device.

Alu Aluminium

Master data

Item no.	1362822
Type	ASL 733 30 ALU
Description 1	Distance saddle
Description 2	with slot
Dimension	25-30mm
Material	Aluminium
Material symbol	Alu
Smallest sales unit	20,00 Piece
Weight	1,59 kg/100 pc.

Technical data sheet

Spacer clip 733 ALU

Art.-Nr. 1362822

Technical data

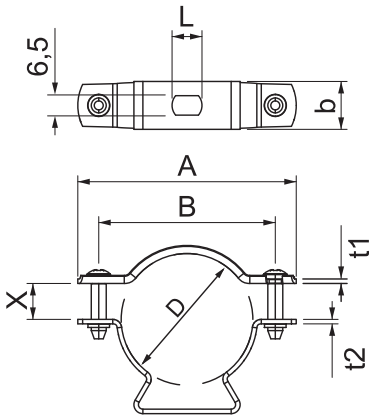

Dimension A	59,00 mm
Dimension B	45,00 mm
Dimension b	16,00 mm
Dimension D	25,00 - 30,00 mm
Dimension D	30,00 mm
Dimension L	10,00 mm
Dimension t1	1,50 mm
Dimension t2	1,50 mm
Dimension x	7,50 mm
Distance to the wall	☑
Number of cables/pipes	1,00
Version	Closed
Fastening type	Screw hole
Halogen-free	☑
Plastic coated	☐
Clamping range D	25,00 - 30,00 mm
UV-resistant	☑