55502611	DATA SHEET	LAPP
Valid from: 07.03.2019	SILVYN® US-M AS / SILVYN® US AS	

SILVYN® US-M AS / SILVYN® US AS is a metal connector with metric and PG connecting thread, with a metal sleeve.
The connector is universally useable and has a high dust and fluid protection.



Material:

Body	Brass, nickel plated
Pressure nut	Brass, nickel plated
Sealing ring	TPE
Sleeve	Brass, nickel plated
O-ring	NBR

Technical features:

Connecting thread	M10x1,5 up to M63x1,5 acc. to DIN EN 60423 PG 7 up to PG 48 acc. to DIN 40430
Nominal width	NW 10 up to NW 56
Protection class	IP 40 Depending on the used conduit
Temperature range	-40°C up to +125°C

Approvals:

CE

Reference standards:

DIN EN 61386-23

Suitable Conduits:

SILVYN® AS

For more information please see our current catalogue. Please do not hesitate to contact our laboratory if there are any questions regarding resistance against aggressive agents and special oil.

We reserve all rights according to DIN ISO 16016.

MAST1 / 08.03.2019 / freigegeben

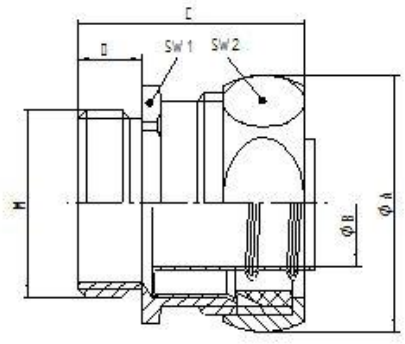

Dimension table:

Part No.	Thread	NW	Length C mm	Thread length D mm	Outer Ø A mm	Inner Ø B mm	SW 1	SW 2
SILVYN® US-M AS								
5550 2611	M 10x1,5	10	31,0	10,0	19,0	6,5	15	17
5550 2612	M 12x1,5	14	33,0	10,0	23,0	9,0	19	21
5550 2613	M 16x1,5	17	33,0	10,0	27,0	12,5	23	25
5550 2614	M 20x1,5	21	33,0	10,0	31,0	16,0	27	29
5550 2615	M 25x1,5	27	41,0	11,0	39,0	21,0	34	36
5550 2616	M 32x1,5	36	43,0	13,0	48,0	27,5	43	45
5550 2617	M 40x1,5	45	43,0	13,0	57,0	35,0	52	54
5550 2618	M 50x1,5	56	49,0	14,0	70,0	45,0	63	66
5550 2619	M 63x1,5	56	49,0	14,0	74,0	50,0	70	70
SILVYN® US AS								
5550 2661	PG 7	10	28,0	7,0	19,0	6,5	15	17
5550 2662	PG 9	14	30,0	7,0	23,0	10,0	19	21
5550 2663	PG 11	17	30,0	7,0	27,0	12,5	23	25
5550 2664	PG 13,5	19	30,0	7,0	29,0	14,5	25	27
5550 2665	PG 16	21	30,0	7,0	31,0	16,5	27	29
5550 2666	PG 21	27	40,0	10,0	39,0	21,5	34	36
5550 2667	PG 29	36	40,0	10,0	48,0	29,0	43	45
5550 2668	PG 36	45	40,0	10,0	57,0	38,0	52	54
5550 2669	PG 48	56	45,0	10,0	70,0	50,0	63	66

We reserve all rights according to DIN ISO 16016.
PD 0019/05_04.18EN

MAST1 / 08.03.2019 / freigegeben