KMM1L20

Wyłącznik krańcowy serii K, zestyki 2NO wolnoprzełączające. Pręt elastyczny.



Product designation			Limit switches - Wobble stick, omnidirectional
Product type designation			KMM
General characteristics			
Material			
	Housing		Aluminium-zinc alloy
	Rod		Frexible
Contact characteristics			
Type of contact			2NO Slow break
Thermal current Ith		A	10
IEC/EN 60947-5-1 designation			A300 Q300
Rated insulation voltage Ui		V	440
Rated impulse withstand voltage Uimp		kV	4
Short-circuit protection with fuse		Class/A	10 gG/SC QUICK FUSE
Switching speed			
	min	m/s	0.5
	max	m/s	1.5
IEC Conventional free air thermal current Ith		A	10
Resistance per pole (average value)		mΩ	<10
Mechanical features			
Operating head fixing			Locking bayonet insert
Operating torque			
		Ncm	1
		ozin	1.42
Tightening torque (Max)			
Switch fixing			
		Nm	2.5
		lbin	22.1
Contact terminals			
		Nm	0.8
		lbin	7
Body lid screw fixing			
		Nm	0.8
		lbin	7
Conductor section			
AWG/Kcmil			
	min		16
	max		14
IEC			
	min	mm²	1or 2
	max	mm²	2.5

The characteristics described in this document are subject to updates or modifications at any time. The descriptions, technical and functional information, illustrations and instructions in this brochure are purely illustrative, and are consequently not contractually binding

KMM1L20

Wyłącznik krańcowy serii K, zestyki 2NO wolnoprzełączające. Pręt elastyczny.

Cable connection			Self-releasing screw terminal
Cable entry			M20 on the bottom
Operations			
Mechanical life		cycles	<10000000
Mechanical operation		cycles/h	3600
Ambient conditions			
Temperature			
	Operating temperature		
		min °C	-25
		max °C	+70
	Storage temperature		
		min °C	-40
		max °C	+70
Resistance & Protection			
IP degree			
		Terminals	IP20
		Body housing	IP65
Pollution degree			3

Dimensions

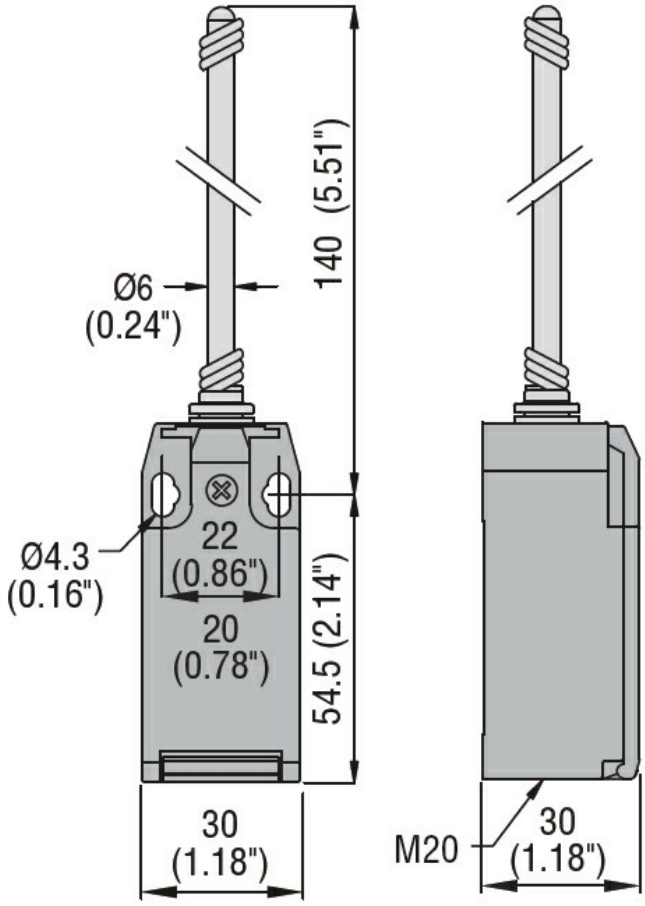

Wiring diagrams

The characteristics described in this document are subject to updates or modifications at any time. The descriptions, technical and functional information, illustrations and instructions in this brochure are purely illustrative, and are consequently not contractually binding

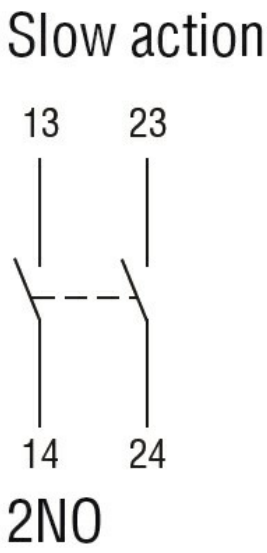

Certifications and compliance

Compliance

CSA C22.2 n° 14
EN 50047
IEC/EN 60204-1
IEC/EN 60947-1
IEC/EN 60947-5-1
UL508

Certificates

CCC
cULus
EAC

ETIM classification

ETIM 8.0 EC000030

The characteristics described in this document are subject to updates or modifications at any time. The descriptions, technical and functional information, illustrations and instructions in this brochure are purely illustrative, and are consequently not contractually binding