SIEMENS

Data sheet 5SL4320-7



Miniature circuit breaker 400 V 10kA, 3-pole, C, 20 A

Model	
product brand name	SENTRON
product designation	Miniature circuit breaker
design of the product	5SL miniature circuit breakers
General technical data	
number of poles	3
number of poles / note	3P
tripping characteristic class	C
mechanical service life (switching cycles) / typical	10 000
overvoltage category	III
degree of pollution	2
Voltage	
insulation voltage	
• with multi-phase operation / at AC / rated value	440 V
Supply voltage	
type of voltage	AC
supply voltage / at AC / rated value	400 V
operating voltage	
• with multi-phase operation / at AC / maximum	440 V
• at DC / rated value / maximum	72 V
Protection class	
protection class IP	IP20, with connected conductors
Switching capacity	
switching capacity current	
• acc. to EN 60898 / rated value	10 kA
• acc. to IEC 60947-2 / rated value	10 kA
energy limitation class	3
Dissipation	
power loss [W] / for rated value of the current / at AC / in hot operating state / per pole	2 W
Current	
operational current	
• at 30 °C / rated value	20 A
• at 40 °C / rated value	18.94 A
• at 45 °C / rated value	18.4 A
• at 55 °C / rated value	17.24 A
• at AC / rated value	20 A

Subject to change without notice
© Copyright Siemens

suitability for operation	Residential buildings/infrastructure
Product details	
product function / neutral conductor switching	No
product feature / touch protection	Yes
product feature	
● halogen-free	Yes
● sealable	Yes
● silicon-free	Yes
product extension / installable / supplementary devices	Yes
Connections	
connectable conductor cross-section / solid	
● minimum	0.75 mm²
● maximum	25 mm²
connectable conductor cross-section / stranded	
● minimum	0.75 mm²
● maximum	25 mm²
connectable conductor cross-section / finely stranded / with core end processing	
● minimum	0.75 mm²
● maximum	25 mm²
tightening torque / with screw-type terminals	
● minimum	2.5 N·m
● maximum	3 N·m
Mechanical Design	
height	90 mm
width	54 mm
depth	76 mm
installation depth	70 mm
number of modular width units	3
mounting position	any
net weight	445 g
Environmental conditions	
influence of the surrounding temperature	+55 °C, max. 95% humidity
ambient temperature / during operation	
● minimum	-25 °C
● maximum	55 °C
ambient temperature / during storage	
● minimum	-40 °C
● maximum	75 °C
Certificates	
reference code	
● acc. to DIN EN 61346-2	F
● acc. to IEC 81346-2	F

General Product Approval | **Declaration of Conformity**

CEBEC IMQ VDE

Miscellaneous

EAC CE EG-Konf.

Test Certificates

Miscellaneous

Subject to change without notice
© Copyright Siemens

Further information

Information- and Downloadcenter (Catalogs, Brochures,…)
http://www.siemens.com/lowvoltage/catalogs
Industry Mall (Online ordering system)
https://mall.industry.siemens.com/mall/en/en/Catalog/product?mlfb=5SL4320-7
Service&Support (Manuals, Certificates, Characteristics, FAQs,...)
https://support.industry.siemens.com/cs/ww/en/ps/5SL4320-7
Image database (product images, 2D dimension drawings, 3D models, device circuit diagrams, ...)
http://www.automation.siemens.com/bilddb/cax_en.aspx?mlfb=5SL4320-7
Tender specifications
http://www.siemens.com/specifications

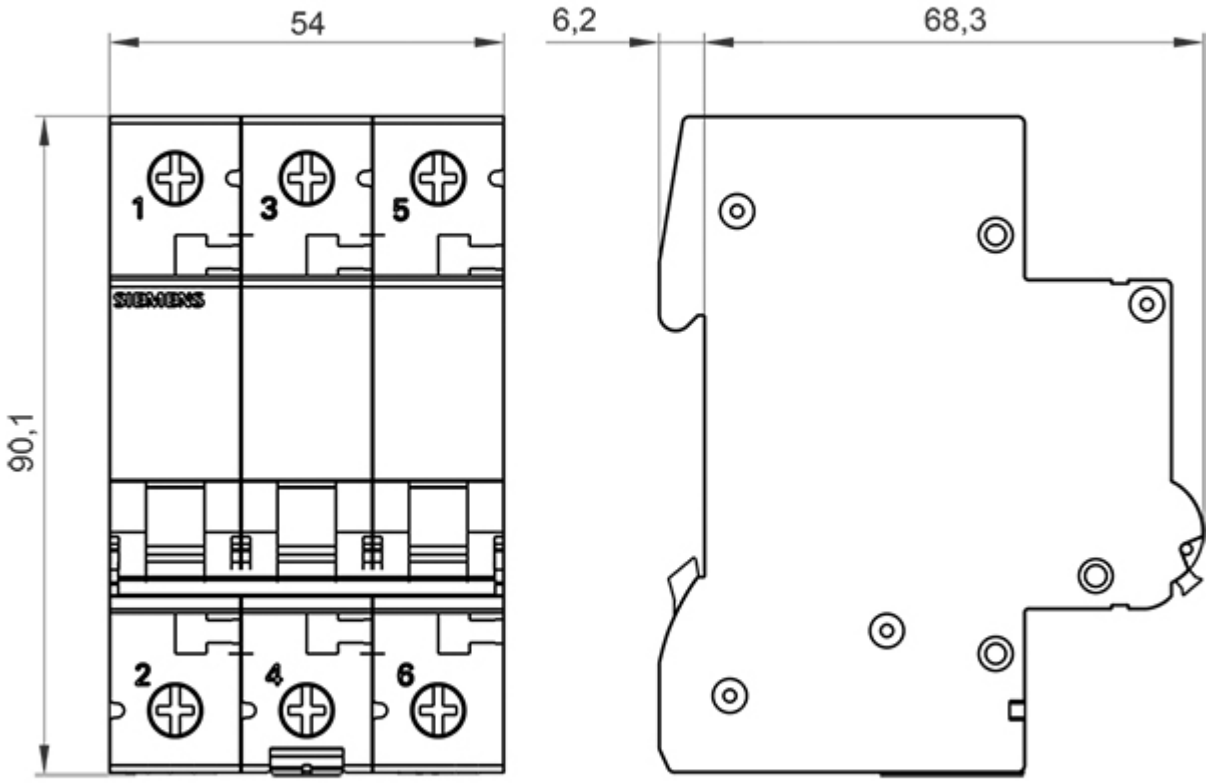

Subject to change without notice
© Copyright Siemens