SIEMENS

Data sheet 5SV3312-6KL



Residual current operated circuit breaker, 2-pole, type A, In: 25 A, 30 mA, Un AC: 230 V, N left

Model	
product brand name	SENTRON
product designation	RCCB
design of the product	Instantaneous
product variations	N left
General technical data	
number of poles	2
size of installation devices / acc. to DIN 43880	1
mechanical service life (switching cycles) / typical	10 000
short-circuit current / of series fuse / maximum permissible	63 A
short-circuit current rating	10 kA
switching function / short-term delayed	No
overvoltage category	III
Supply voltage	
supply voltage	
● at AC / rated value	230 V
● for testing equipment / minimum	195 V
operating frequency	50 Hz
supply voltage frequency / rated value	50 Hz
Protection class	
protection class IP	IP20, if the distribution board is installed, with connected conductors
Switching capacity	
switching capacity current	
● acc. to EN 60898 / rated value	0.5 kA
● according to IEC 61008-1 / rated value	0.5 kA
Dissipation	
power loss [W]	
● for rated value of the current / at AC / in hot operating state / per pole	1 W
● maximum	2 W
Current	
tripping fault current / rated value	30 mA
operational current	
● at 40 °C / rated value	25 A
● at 45 °C / rated value	25 A
● at 50 °C / rated value	25 A
● at 55 °C / rated value	25 A

Subject to change without notice
© Copyright Siemens

● at 60 °C / rated value	25 A
● at 65 °C / rated value	23.3 A
● at 70 °C / rated value	17.6 A
● at AC / rated value	25 A
residual current type	A
let-through current / permissible	5 200 kA
I2t value / permissible	58 000 A²·s
surge current resistance / rated value	1 kA
Product details	
product feature / silicon-free	Yes
product extension / installable / supplementary devices	Yes
Connections	
connectable conductor cross-section / solid	
● minimum	0.75 mm²
● maximum	35 mm²
connectable conductor cross-section / stranded	
● minimum	0.75 mm²
● maximum	35 mm²
tightening torque / with screw-type terminals	
● minimum	2.5 N·m
● maximum	3 N·m
position / of power supply cord	top or bottom
Mechanical Design	
height	90 mm
width	36 mm
depth	70 mm
installation depth	70 mm
number of modular width units	2
fastening method	DIN rail (REG)
mounting position	any
Environmental conditions	
ambient temperature / during operation	
● minimum	-25 °C
● maximum	45 °C
ambient temperature / during storage	
● minimum permissible	-40 °C
● maximum permissible	75 °C
number of test cycles / for environmental testing / acc. to IEC 60068-2-30	28
Certificates	
reference code	
● acc. to DIN EN 61346-2	F
● acc. to IEC 81346-2	F

General Product Approval

CCC ÖVE VDE Miscellaneous Miscellaneous EAC

Declaration of Conformity	other	Railway
CE EG-Konf.	Miscellaneous	Confirmation Vibration and Shock

Subject to change without notice
© Copyright Siemens

Further information

Information- and Downloadcenter (Catalogs, Brochures,…)
http://www.siemens.com/lowvoltage/catalogs
Industry Mall (Online ordering system)
https://mall.industry.siemens.com/mall/en/en/Catalog/product?mlfb=5SV3312-6KL
Service&Support (Manuals, Certificates, Characteristics, FAQs,...)
https://support.industry.siemens.com/cs/ww/en/ps/5SV3312-6KL
Image database (product images, 2D dimension drawings, 3D models, device circuit diagrams, ...)
http://www.automation.siemens.com/bilddb/cax_en.aspx?mlfb=5SV3312-6KL
Tender specifications
http://www.siemens.com/specifications

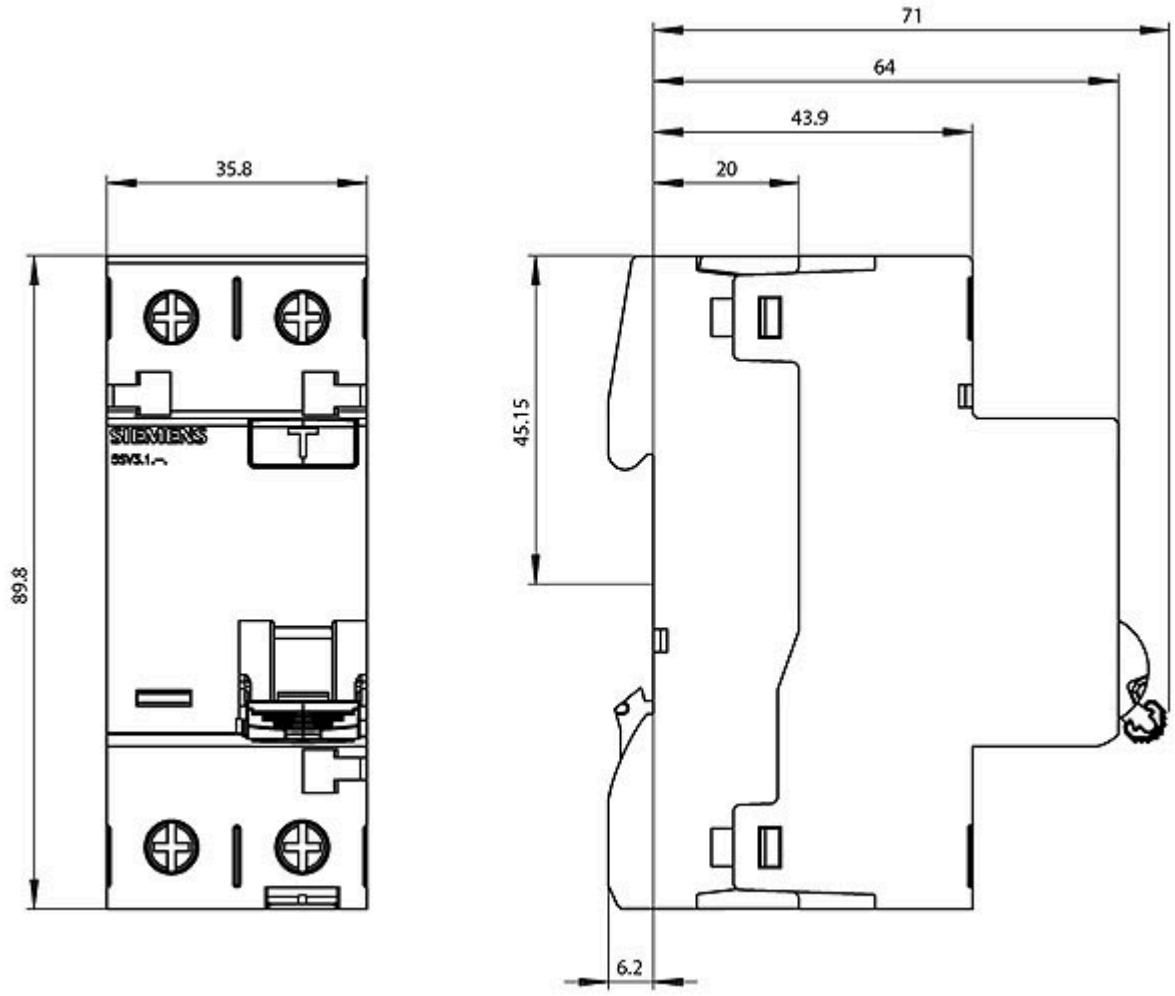

Subject to change without notice
© Copyright Siemens

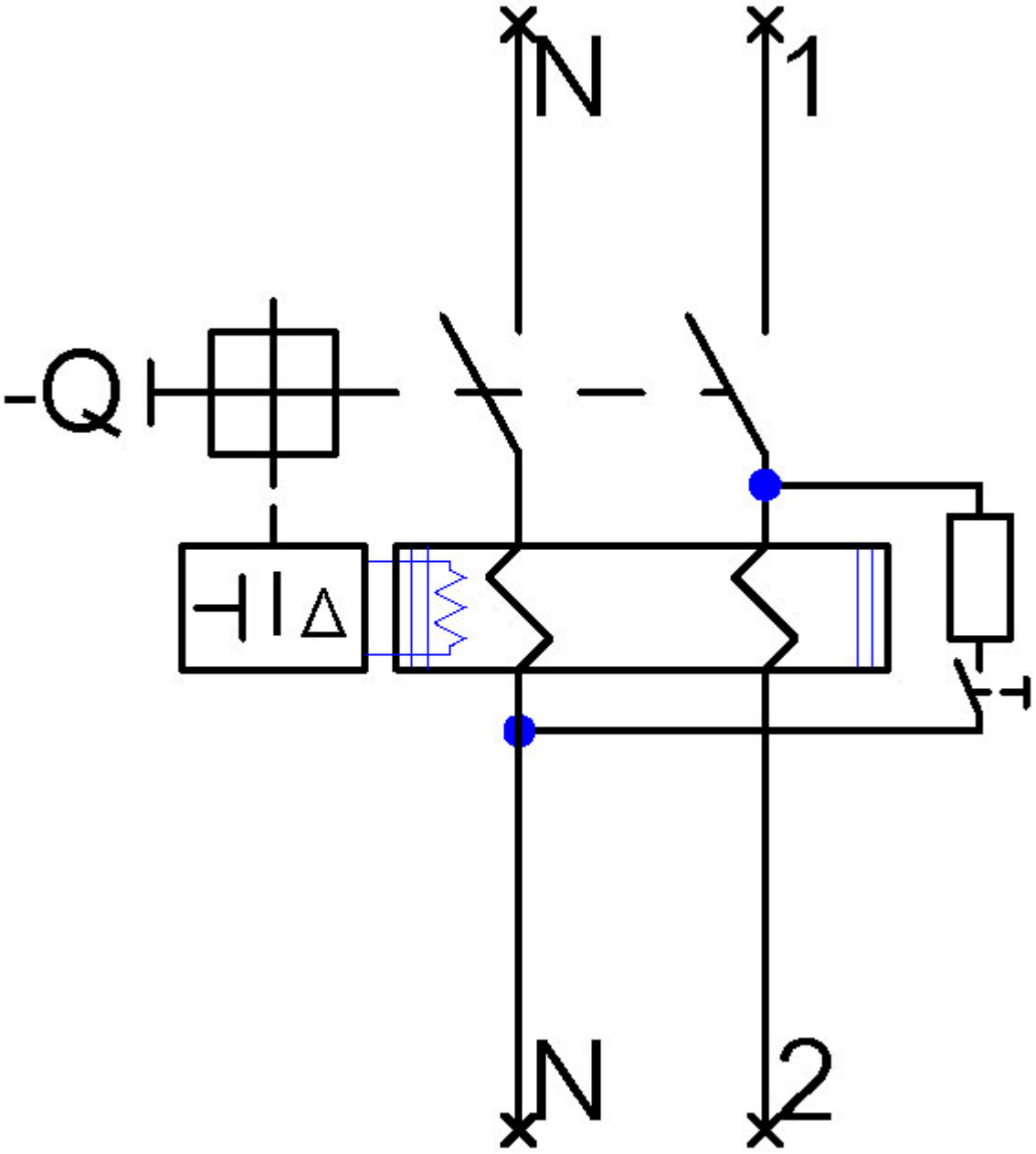

Subject to change without notice
© Copyright Siemens

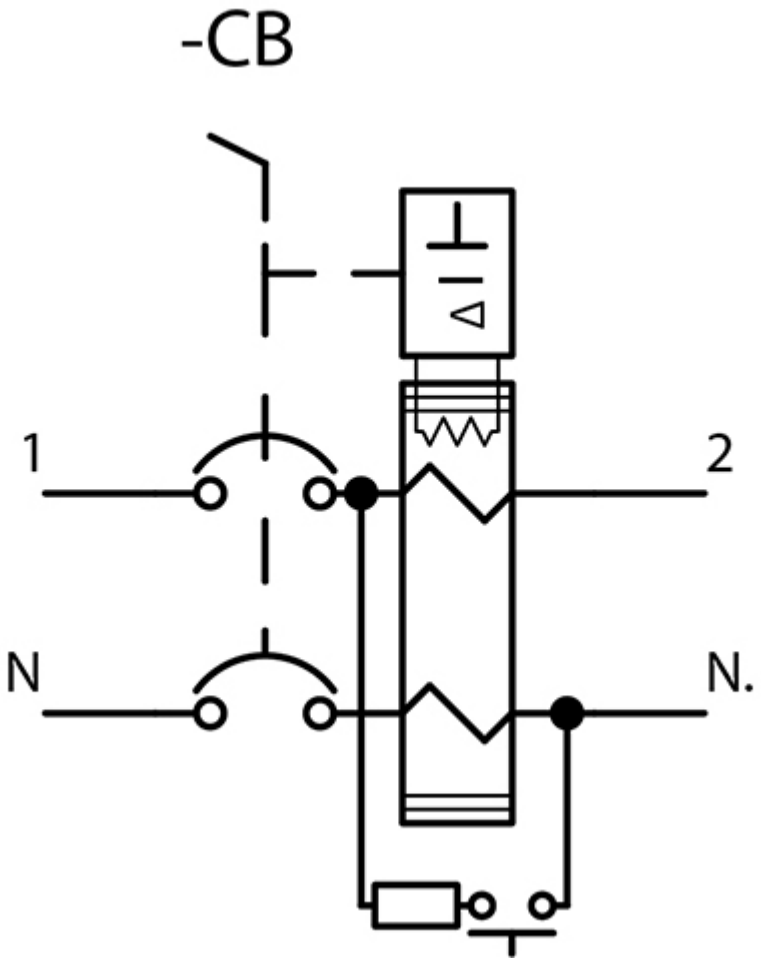

Subject to change without notice
© Copyright Siemens