SIEMENS

Data sheet 5SV6016-6KK16



AFDD-MCB-Combination 230V, 6kA, 1+N, B, 16A Compact (1MW)

Model	
product brand name	SENTRON
product designation	Arc-fault detection unit MCB
design of the product	Compact unit
General technical data	
number of poles	2
number of poles / note	1P+N
design of pole	1P+N
tripping characteristic class	B
size of installation devices / acc. to DIN 43880	1
touch protection against electrical shock / acc. to EN 50274	finger and back-of-hand safe
mechanical service life (switching cycles) / typical	10 000
switching function / short-term delayed	No
overvoltage category	III
degree of pollution	2
Supply voltage	
type of voltage	AC
supply voltage	
● at AC / rated value	230 V
supply voltage frequency / rated value	50/60 Hz
Protection class	
protection class IP	IP20, with connected protective device and conductors
Switching capacity	
switching capacity current	
● according to EN 60898-1 / rated value	6 000 A
● acc. to IEC 60947-2 / rated value	6 000 A
Dissipation	
power loss [W] / for rated value of the current / at AC / in hot operating state / per pole	1.35 W
Current	
tripping current	
● in the event of electrical arcs in parallel with the load / minimum	50 A
● in the event of electrical arcs in parallel with the load / maximum	500 A
● in the event of electrical arcs in series with the load / minimum	2 A

Subject to change without notice
© Copyright Siemens

● in the event of electrical arcs in series with the load / maximum	16 A
operational current / at AC / rated value	16 A
Product details	
product feature	
● halogen-free	Yes
● silicon-free	Yes
product extension / installable / supplementary devices	Yes
Connections	
connectable conductor cross-section / solid	
● minimum	0.75 mm²
● maximum	16 mm²
connectable conductor cross-section / stranded	
● minimum	0.75 mm²
● maximum	16 mm²
connectable conductor cross-section / finely stranded / with core end processing	
● minimum	0.75 mm²
● maximum	10 mm²
tightening torque / with screw-type terminals	
● minimum	1.2 N·m
● maximum	2 N·m
position / of power supply cord	any
Mechanical Design	
height	90 mm
width	18 mm
depth	68.5 mm
installation depth	70 mm
number of modular width units	1
fastening method	DIN rail (REG)
mounting position	any
net weight	150 g
Environmental conditions	
ambient temperature / during operation	
● minimum	-25 °C
● maximum	45 °C
ambient temperature / during storage	
● minimum	-40 °C
● maximum	75 °C
ambient temperature / with relative humidity 95%	55 °C
number of test cycles / for environmental testing / acc. to IEC 60068-2-30	28

General Product Approval	Declaration of Conformity	Test Certificates
EAC	CE EG-Konf.	Miscellaneous

Further information

Information- and Downloadcenter (Catalogs, Brochures,…)
http://www.siemens.com/lowvoltage/catalogs
Industry Mall (Online ordering system)
https://mall.industry.siemens.com/mall/en/en/Catalog/product?mlfb=5SV6016-6KK16
Service&Support (Manuals, Certificates, Characteristics, FAQs,...)
https://support.industry.siemens.com/cs/ww/en/ps/5SV6016-6KK16
Image database (product images, 2D dimension drawings, 3D models, device circuit diagrams, ...)
http://www.automation.siemens.com/bilddb/cax_en.aspx?mlfb=5SV6016-6KK16

Subject to change without notice
© Copyright Siemens

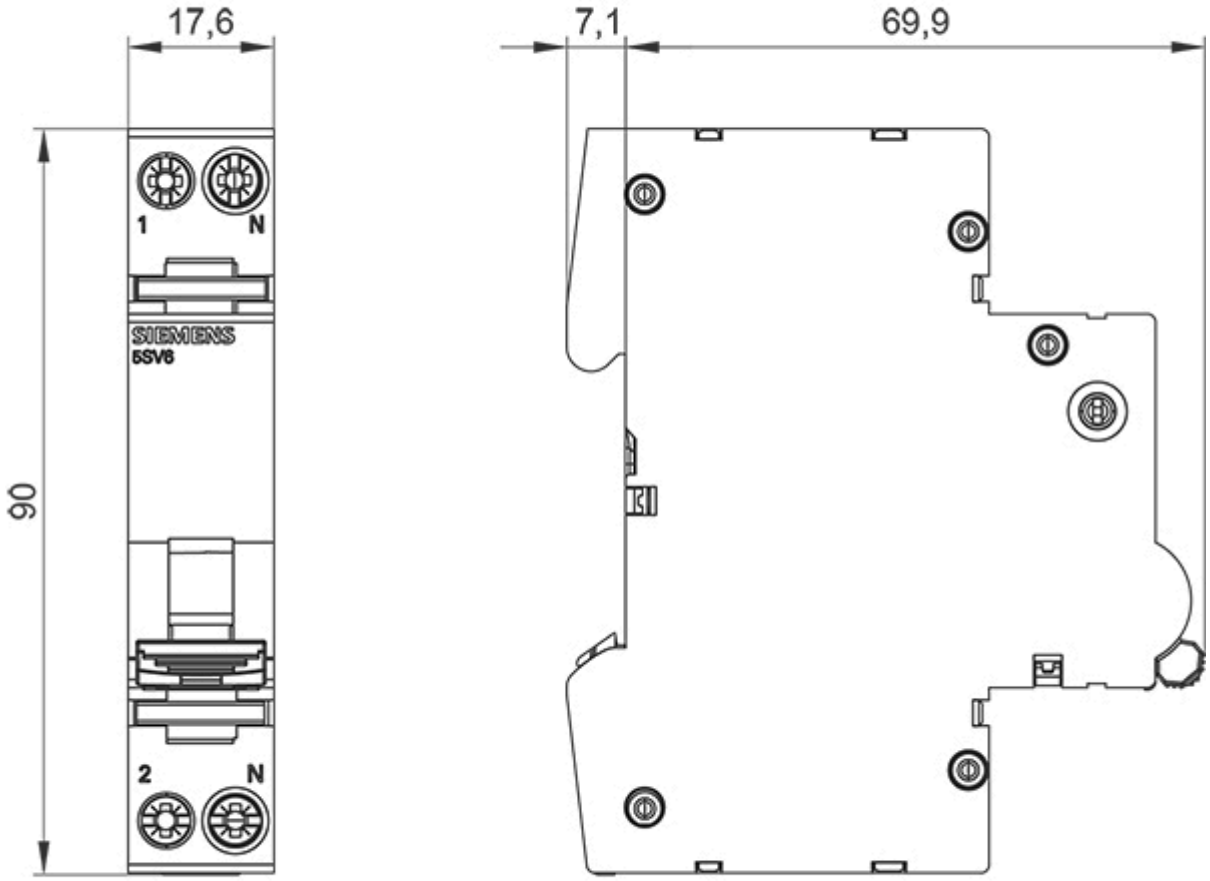

Subject to change without notice
© Copyright Siemens

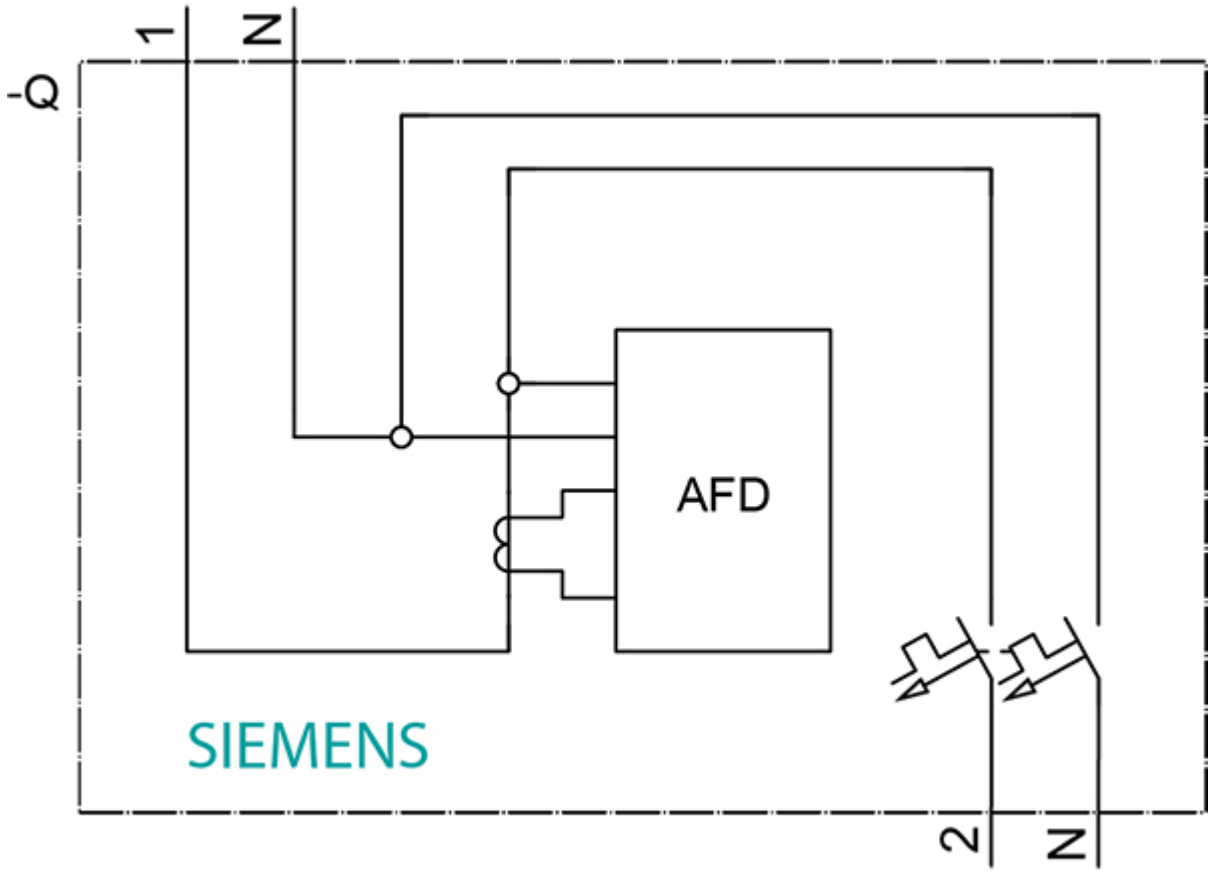

Subject to change without notice
© Copyright Siemens

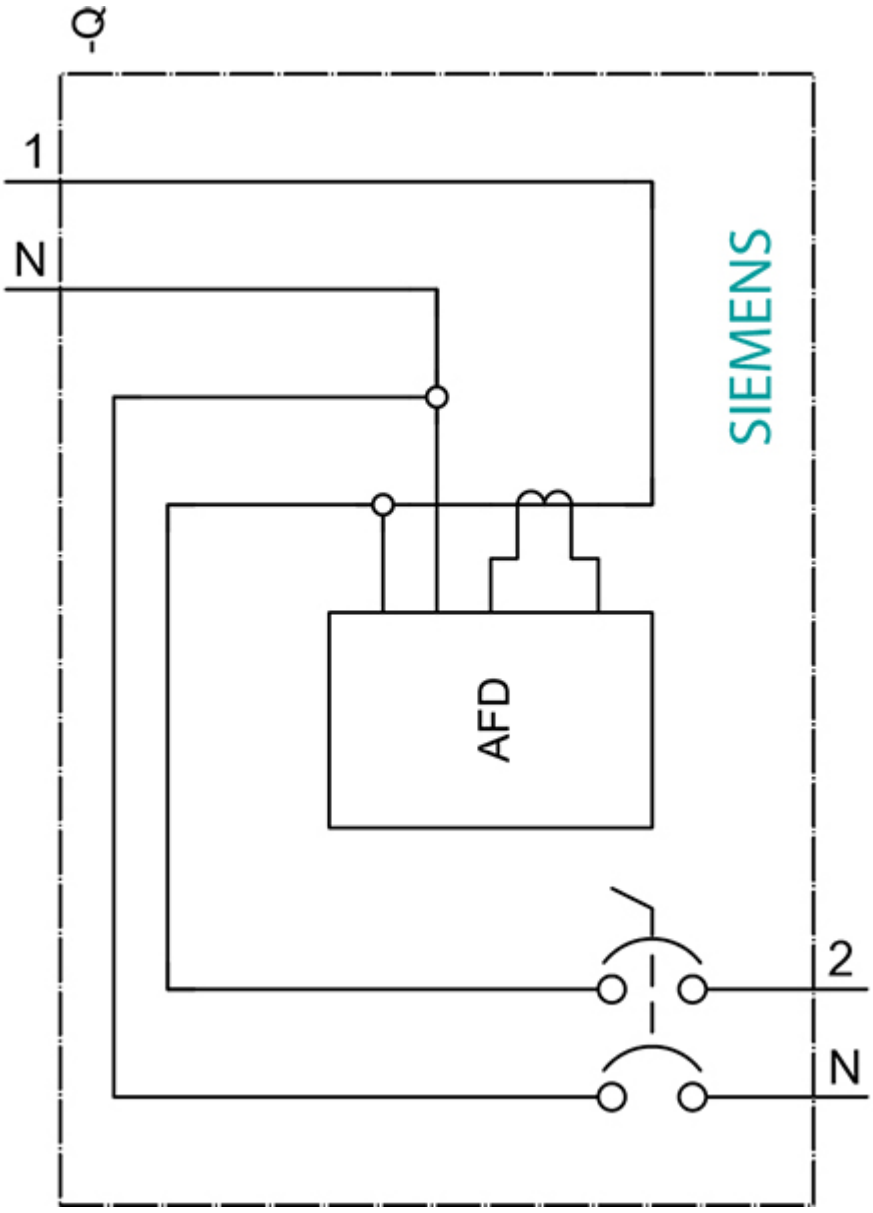

Subject to change without notice
© Copyright Siemens