SIEMENS

Data sheet 3SU1152-6AA60-1AA0



Indicator lights, 22 mm, round, metal, shiny, white, lens, smooth, with holder, LED module with integrated LED 24 V AC/DC, screw terminal

product brand name	SIRIUS ACT
product designation	Indicator lights
design of the product	Complete unit
product type designation	3SU1
product line	Metal, shiny, 22 mm
manufacturer's article number	
● of supplied LED module	3SU1401-1BB60-1AA0
● of the supplied holder	3SU1550-0AA10-0AA0
● of supplied repeater	3SU1051-6AA60-0AA0
Enclosure	
number of command points	1
Actuator	
product extension optional light source	Yes
color	
● of the actuating element	white
material of the actuating element	plastic
shape of the actuating element	round
outer diameter of the actuating element	29.45 mm
Front ring	
product component front ring	No
Holder	
material of the holder	Metal
Display	
number of LED modules	1
General technical data	
product component light source	Yes
insulation voltage rated value	320 V
degree of pollution	3
surge voltage resistance rated value	4 kV
protection class IP	IP66, IP67, IP69(IP69K)
● of the terminal	IP20
degree of protection NEMA rating	1, 2, 3, 3R, 4, 4X, 12, 13
shock resistance	
● acc. to IEC 60068-2-27	sinusoidal half-wave 50g / 11 ms
vibration resistance	
● acc. to IEC 60068-2-6	10 ... 500 Hz: 5g
reference code acc. to IEC 81346-2	P

Subject to change without notice
© Copyright Siemens

Substance Prohibitance (Date)	01.10.2014 00:00:00
Supply voltage	
type of voltage of the supply voltage of the light source	AC/DC
supply voltage of the light source at AC	
● at 50 Hz rated value	24 V
● at 60 Hz rated value	24 V
supply voltage 1 of the light source at DC rated value	24 V
relative negative tolerance of the supply voltage	20 %
relative positive tolerance of the supply voltage	20 %
Control circuit/ Control	
inrush current maximum	2 A
Connections/ Terminals	
type of electrical connection of modules and accessories	Screw-type terminal
type of connectable conductor cross-sections	
● solid with core end processing	2x (0.5 ... 0.75 mm²)
● solid without core end processing	2x (1.0 ... 1.5 mm²)
● finely stranded with core end processing	2x (0.5 ... 1.5 mm²)
● finely stranded without core end processing	2x (1,0 ... 1,5 mm²)
● at AWG cables	2x (18 ... 14)
tightening torque of the screws in the bracket	1 ... 1.2 N·m
tightening torque with screw-type terminals	0.8 ... 0.9 N·m
Lamp	
type of light source	LED
color of the light source	white
light intensity	900 ... 1 400 mcd
Ambient conditions	
ambient temperature	
● during operation	-25 ... +70 °C
● during storage	-40 ... +80 °C
environmental category during operation acc. to IEC 60721	3M6, 3S2, 3B2, 3K6 (with relative air humidity of 10 ... 95 %, no condensation in operation permitted for all devices behind front panel)
Installation/ mounting/ dimensions	
fastening method	front panel mounting
● of modules and accessories	Front plate mounting
height	40 mm
width	30 mm
shape of the installation opening	round
mounting diameter	22.3 mm
positive tolerance of installation diameter	0.4 mm
mounting height	11.8 mm
installation width	29.5 mm
installation depth	49.7 mm

Certificates/ approvals

General Product Approval	Declaration of Conformity
CSA, CCC, UL, EAC	Miscellaneous, CE (EG-Konf.)

Test Certificates	Marine / Shipping
Type Test Certificates/Test Report	ABS, LRS, PRS, RINA, RMRS

Subject to change without notice
© Copyright Siemens

other

Confirmation

Further information

Information- and Downloadcenter (Catalogs, Brochures,…)
https://www.siemens.com/ic10
Industry Mall (Online ordering system)
https://mall.industry.siemens.com/mall/en/en/Catalog/product?mlfb=3SU1152-6AA60-1AA0
Cax online generator
http://support.automation.siemens.com/WW/CAXorder/default.aspx?lang=en&mlfb=3SU1152-6AA60-1AA0
Service&Support (Manuals, Certificates, Characteristics, FAQs,...)
https://support.industry.siemens.com/cs/ww/en/ps/3SU1152-6AA60-1AA0
Image database (product images, 2D dimension drawings, 3D models, device circuit diagrams, EPLAN macros, ...)
http://www.automation.siemens.com/bilddb/cax_de.aspx?mlfb=3SU1152-6AA60-1AA0&lang=en

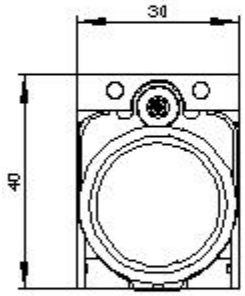

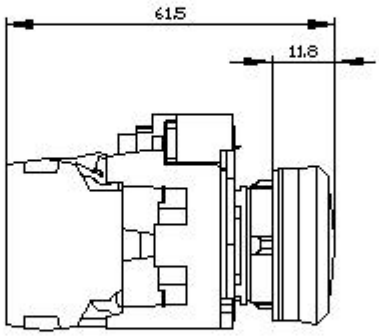



Subject to change without notice
© Copyright Siemens

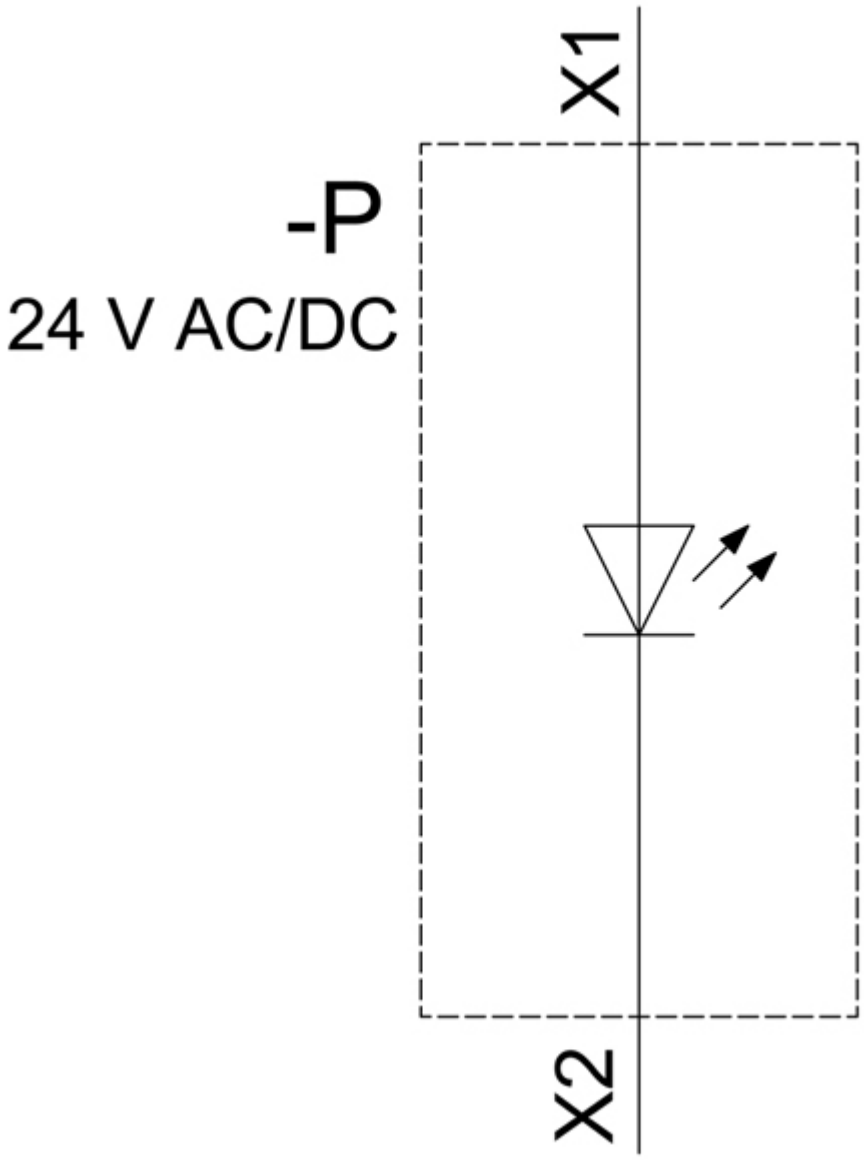

last modified: 7/13/2021

Subject to change without notice
© Copyright Siemens