SIEMENS

Data sheet 3SE5112-0LD02



Position switch Metal enclosure 40 mm according to EN 50041, Device connection 1x (M20 x 1.5) 1 NO/2 NC quick action contacts, roller plunger with 3 mm overtravel and stainless steel roller 13 mm

product brand name	SIRIUS
product designation	Mechanical position switches
product type designation	3SE5
manufacturer's article number	
• of the supplied basic switch	3SE5112-0LA00
• of the supplied actuator head for position switches	3SE5000-0AD02
• of the supplied switching contacts	3SE5000-0LA00
• of the supplied empty enclosure with cover	3SE5112-0AA00
suitability for use safety switch	Yes
General technical data	
product function positive opening	Yes
insulation voltage rated value	400 V
degree of pollution	class 3
surge voltage resistance rated value	6 kV
protection class IP	IP66/IP67
shock resistance	
• acc. to IEC 60068-2-27	30g / 11 ms
vibration resistance acc. to IEC 60068-2-6	0.35 mm/5g
mechanical service life (switching cycles) typical	15 000 000
electrical endurance (switching cycles) at AC-15 at 230 V typical	100 000
electrical endurance (switching cycles) with contactor 3RH11, 3RT1016, 3RT1017, 3RT1024, 3RT1025, 3RT1026 typical	10 000 000
Electrical operating cycles in one hour with contactor 3RH11, 3RT1016, 3RT1017, 3RT1024, 3RT1025, 3RT1026	6 000
thermal current	10 A
material of the enclosure of the switch head	metal
reference code acc. to IEC 81346-2	B
continuous current of the C characteristic MCB	1 A; for a short-circuit current smaller than 400 A
continuous current of the quick DIAZED fuse link	10 A; for a short-circuit current smaller than 400 A
continuous current of the DIAZED fuse link gG	6 A
active principle	mechanical
repeat accuracy	0.05 mm
Substance Prohibitance (Date)	01.07.2006 00:00:00
minimum actuating force in directions of actuation	20 N
length of the sensor	116.3 mm
width of the sensor	40 mm

Subject to change without notice
© Copyright Siemens

design of the switching contact	mechanical
operating frequency rated value	50 ... 60 Hz
number of NC contacts for auxiliary contacts	2
number of NO contacts for auxiliary contacts	1
operational current at AC-15	
• at 24 V rated value	6 A
• at 125 V rated value	6 A
• at 240 V rated value	6 A
• at 400 V rated value	4 A
operational current at DC-13	
• at 24 V rated value	3 A
• at 125 V rated value	0.55 A
• at 250 V rated value	0.27 A
• at 400 V rated value	0.12 A
design of the interface for safety-related communication	without
Enclosure	
design of the housing	block, narrow
material of the enclosure	metal
coating of the enclosure	cathodic immersion coating
design of the housing acc. to standard	Yes
Drive Head	
design of the actuating element	Roller plunger, high-grade steel roller
standard-compliant actuator head	EN 50041, design C
shape of the switch head	roller
design of the switching function	positive opening
circuit principle	snap-action contacts
number of switching contacts safety-related	2
Connections/ Terminals	
type of electrical connection	screw-type terminals
type of connectable conductor cross-sections	
• solid	1x (0.5 ... 1.5 mm²), 2x (0.5 ... 0.75 mm²)
• finely stranded with core end processing	1x (0.5 ... 1.5 mm²), 2x (0.5 ... 0.75 mm²)
• at AWG cables solid	1x (20 ... 16), 2x (20 ... 18)
• at AWG cables stranded	1x (20 ... 16), 2x (20 ... 18)
cable entry type	1x (M20 x 1.5)
Communication/ Protocol	
design of the interface	without
Ambient conditions	
ambient temperature	
• during operation	-25 ... +85 °C
• during storage	-40 ... +90 °C
explosion protection category for dust	none
Installation/ mounting/ dimensions	
mounting position	any
fastening method	screw fixing
Certificates/ approvals	

General Product Approval					**Functional Safety/Safety of Machinery**
CSA	CCC	UL	EAC	EAC	Type Examination Certificate

Declaration of Conformity	**Test Certificates**	**other**

Subject to change without notice
© Copyright Siemens

Miscellaneous

EG-Konf.

Type Test Certificates/Test Report

Confirmation

Further information

Information- and Downloadcenter (Catalogs, Brochures,…)
https://www.siemens.com/ic10
Industry Mall (Online ordering system)
https://mall.industry.siemens.com/mall/en/en/Catalog/product?mlfb=3SE5112-0LD02
Cax online generator
http://support.automation.siemens.com/WW/CAXorder/default.aspx?lang=en&mlfb=3SE5112-0LD02
Service&Support (Manuals, Certificates, Characteristics, FAQs,...)
https://support.industry.siemens.com/cs/ww/en/ps/3SE5112-0LD02
Image database (product images, 2D dimension drawings, 3D models, device circuit diagrams, EPLAN macros, ...)
http://www.automation.siemens.com/bilddb/cax_de.aspx?mlfb=3SE5112-0LD02&lang=en

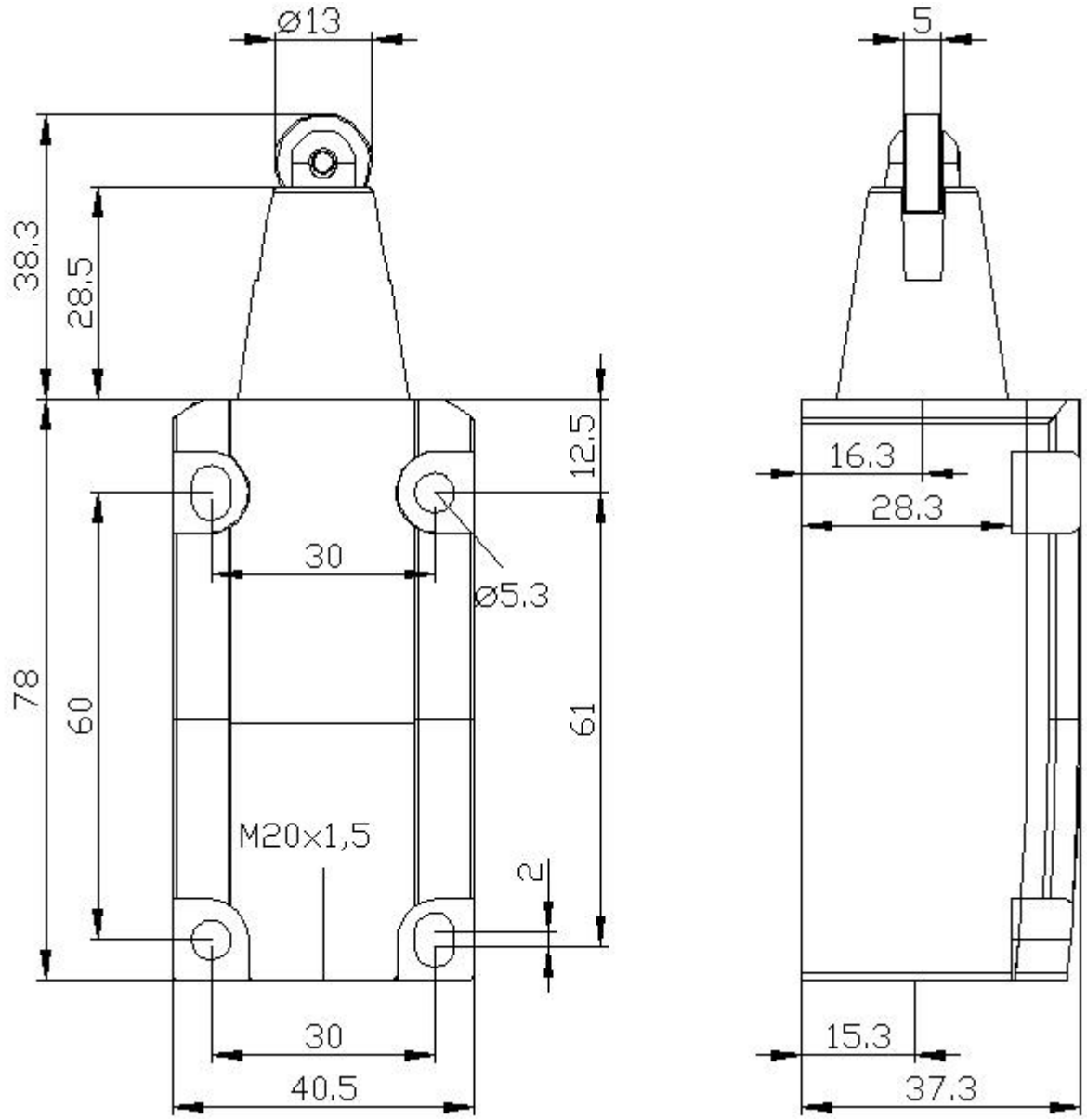

Subject to change without notice
© Copyright Siemens

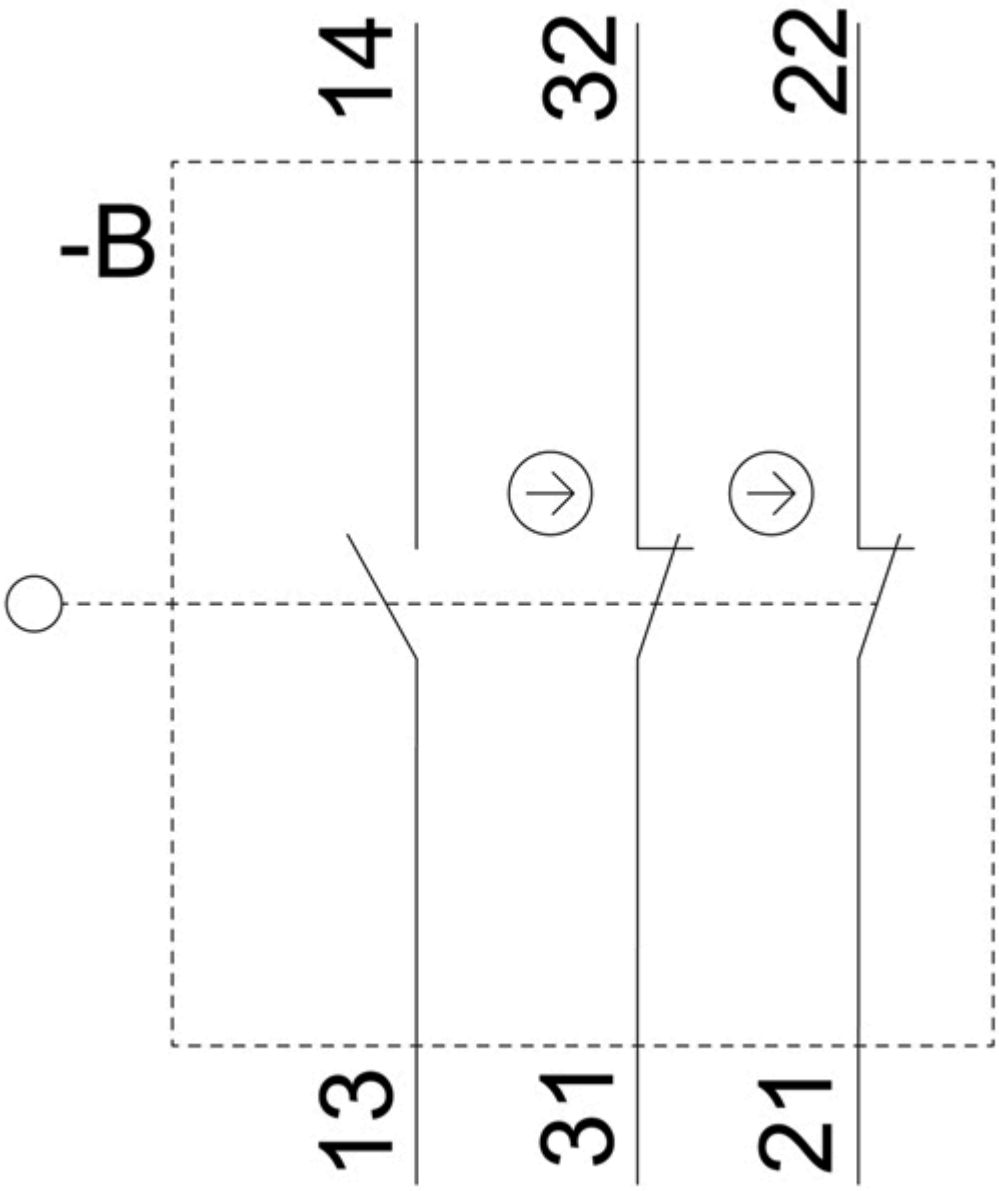

Subject to change without notice
© Copyright Siemens



last modified: 12/21/2020

Subject to change without notice
© Copyright Siemens