SIEMENS

Data sheet 3SU1000-3AB42-0AA0



Twin pushbutton, 22 mm, round, plastic, green, red, pushbuttons, flat

product brand name	SIRIUS ACT
product designation	Twin pushbuttons
design of the product	Actuating/signaling element
product type designation	3SU1
product line	Plastic, black, 22 mm
Enclosure	
number of command points	1
Actuator	
design of the actuating element	Flat buttons
principle of operation of the actuating element	momentary contact type
product extension optional	
● light source	No
● contact module	Yes
color of the actuating element	green / red
material of the actuating element	plastic
shape of the actuating element	oval
Front ring	
product component front ring	Yes
design of the front ring	Standard
material of the front ring	plastic
color of the front ring	black
General technical data	
protection class IP	IP66, IP67, IP69(IP69K)
degree of protection NEMA rating	1, 2, 3, 3R, 4, 4X, 12, 13
shock resistance	
● acc. to IEC 60068-2-27	Sinusoidal half-wave 50g / 11 ms
● for railway applications acc. to DIN EN 61373	Category 1, Class B
vibration resistance	
● acc. to IEC 60068-2-6	10 ... 500 Hz: 5g
● for railway applications acc. to DIN EN 61373	Category 1, Class B
operating frequency maximum	3 600 1/h
mechanical service life (switching cycles) typical	2 000 000
reference code acc. to IEC 81346-2	S
Substance Prohibitance (Date)	01.10.2014 00:00:00
Ambient conditions	
ambient temperature	
● during operation	-25 ... +70 °C
● during storage	-40 ... +80 °C
environmental category during operation acc. to IEC	3M6, 3S2, 3B2, 3C3, 3K6 (with relative air humidity of 10 ... 95 %)

Subject to change without notice
© Copyright Siemens

60721	

Installation/ mounting/ dimensions	
height	57.7 mm
width	29.8 mm
shape of the installation opening	round
mounting diameter	22.3 mm
positive tolerance of installation diameter	0.4 mm
mounting height	14.4 mm
installation width	29.9 mm
installation depth	25.7 mm

Certificates/ approvals

General Product Approval			Declaration of Conformity		Test Certificates
CSA	UL	EAC	UK Declaration of Conformity	EG-Konf.	Type Test Certificates/Test Report

Test Certificates	Marine / Shipping				
Special Test Certificate	ABS	LRS	PRS	RINA	RMRS

other
Confirmation

Further information

Information- and Downloadcenter (Catalogs, Brochures,…)
https://www.siemens.com/ic10
Industry Mall (Online ordering system)
https://mall.industry.siemens.com/mall/en/en/Catalog/product?mlfb=3SU1000-3AB42-0AA0
Cax online generator
http://support.automation.siemens.com/WW/CAXorder/default.aspx?lang=en&mlfb=3SU1000-3AB42-0AA0
Service&Support (Manuals, Certificates, Characteristics, FAQs,...)
https://support.industry.siemens.com/cs/ww/en/ps/3SU1000-3AB42-0AA0
Image database (product images, 2D dimension drawings, 3D models, device circuit diagrams, EPLAN macros, ...)
http://www.automation.siemens.com/bilddb/cax_de.aspx?mlfb=3SU1000-3AB42-0AA0&lang=en

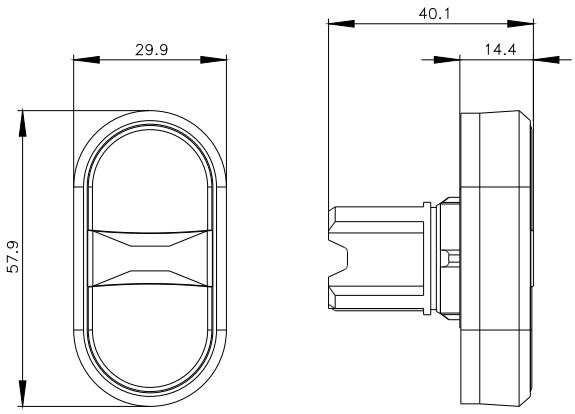

last modified: 10/6/2021

Subject to change without notice
© Copyright Siemens

Subject to change without notice
© Copyright Siemens