DALI Multi-Sensor

Ceiling Installation

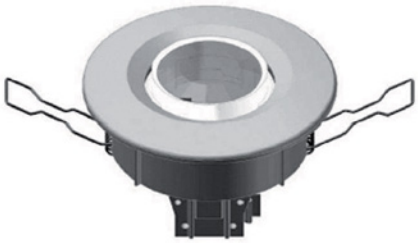

Box Installation

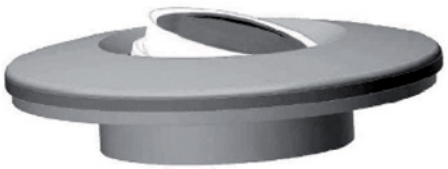

Surface Mount



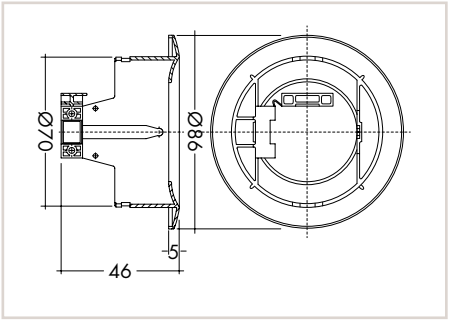

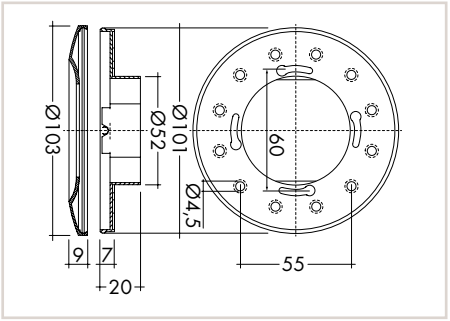

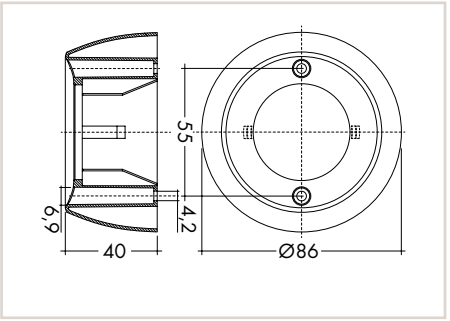

The WAGO DALI MSensor 02 is paired with DALI Master I/O modules (753-647 or 750-641) and has been designed for the following key applications:

- Individual offices
- Open-plan offices
- Training/Presentation rooms
- Corridors, passageways and garages

This multi-sensor features both a motion/presence detector and a light sensor. As an option, the sensor can be operated via remote control (from Tridonic). The sensor enables both motion/presence detection and daylight-dependent lighting control, both of which can also be deactivated.

Addressing is performed via rotary switch or WAGO DALI Configurator. Parameters can be adjusted individually via WAGO DALI Configurator.
Power supply is provided via the DALI line.
The number of sensors, which can be operated on a DALI line, depends on the total power consumption of the specific devices and the address range for the actuators and sensors. Due to the capacity of the DALI bus, a maximum of 16 DALI sensor couplers may be operated on a DALI Multi-Master Module (753-647).

Installation notes:

- The DALI MSensor 02 is supplied directly via DALI line.
- DALI is not SELV (Safety Extra Low Voltage). The installation instructions for mains voltage therefore apply.
- The detection range of the sensor must be within the lighting area of the controlled luminaires.
- The detection ranges of the sensors must not overlap as this may influence the lighting control.
- When installed at a height other than the recommended installation height (2.5 m), the presence and light sensor might show different characteristics. If installed at a higher height, the sensitivity is reduced; the range is reduced when installed at a lower height.
- Heaters, fans, printers and copiers located in the detection range may cause incorrect presence detection.

Item Description	DALI MSensor 02 5DPI 41rc (ceiling installation)	DALI MSensor 02 5DPI 41w (box installation)	DALI MSensor 02 5DPI 41rs (surface mount)
Item No.	2851-8301	2851-8302	2851-8303
Technical Data			
Diameter of detection range when installed at a height of 2.5 m	5 m		
Extension of the detection range	2 m (if mounted at a height of 2.5 m and swiveled through 15°)		-
Swivel design	Yes		No
Swivel range	± 15°		-
Detection angle	360°		
Light measurement at the sensor head	10 ... 650 lx (The measured value at the sensor head corresponds to approx. 15 to 2,000 lux on the surface measured.)		
Remote control range	5 m		
Data sheet and further information, see:	wago.com/2851-8301	wago.com/2851-8302	wago.com/2851-8303

Technical Data	
Power supply	via DALI line
Current consumption	6 mA from DALI line
Surrounding air temperature (operation)	0 … +50 °C
Surrounding air temperature (storage)	−25 … +55 °C
Protection type	IP20
Wire type and cross section	Solid or fine-stranded wires ranging from 0.5 to 1.5 mm² (20 … 16 AWG)

Technical Data	
General Settings	
Motion detector	Switching, on/off
Lighting control	Switching
Setpoint (lighting control)	150 lx
Power-on setting	No action
Bright-out timeout	10 min
Bright-out threshold	150 %
Control speed	4
Switch-on value	Automatic (calculated)
Rotary switch	0, broadcast
Motion Detector Settings	
Fade-in time	< 0.7 s
Presence value	Regulated
Run-on time	20 min
Fade time	5.6 s
Absence value	3 %
Switch-off delay	10 min
Fade-off time	5.6 s
Manual-off	10 min

Light Detection

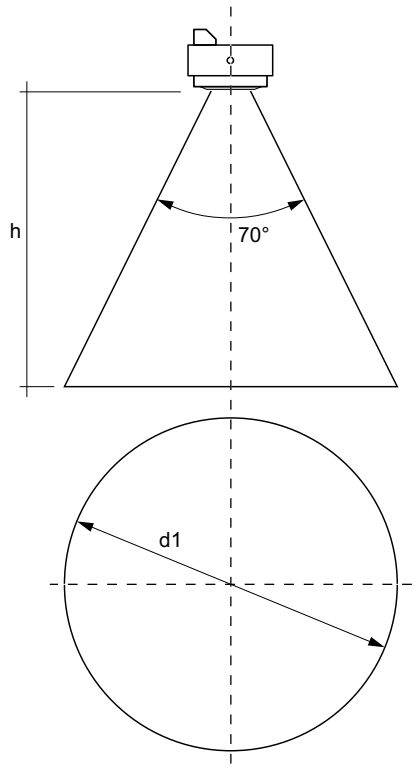

h *	d1	d2	d3
1,7m	2,4m	3,4m	1,36m
2,0m	2,8m	4,0m	1,60m
2,3m	3,2m	4,6m	1,84m
2,5m	3,5m	5,0m	2,00m
2,7m	3,8m	5,4m	-
3,0m	4,2m	6,0m	-
3,5m	4,9m	7,0m	-
4,0m	5,6m	8,0m	-

Motion Detection (d2) and Presence Detection (d3)

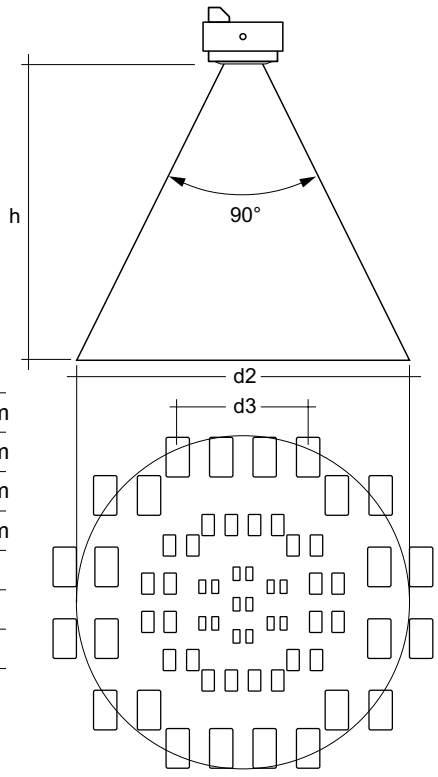

*The recommended maximum room height for office applications is 3 m and for corridor applications 4 m, for example.

Calculation of the diameter:
$d = 2 \times \tan(0.5 \times \alpha) \times h$