SIEMENS

Data sheet 3RH2924-1GP11



Coupling link for direct coil mounting, 24 V DC, 1 NO, 1 NC
for motor contactors size S0 screw terminal connection B1/B2
for 1 NO

General technical data		
product brand name		SIRIUS
size of contactor		S0
protection class IP on the front		IP20
degree of pollution		3
product component protective wiring		Yes
ambient temperature		
● during storage	°C	-40 ... +80
● during operation	°C	-25 ... +60
insulation voltage rated value	V	300
Control circuit/ Control		
type of voltage of the control supply voltage		DC
control supply voltage 1		
● at DC rated value	V	24
operating range factor control supply voltage rated value of magnet coil		
● at DC		0.7 ... 1.25
Auxiliary circuit		
number of NO contacts for auxiliary contacts instantaneous contact		1
operational current of auxiliary contacts		
● at AC-12		
— at 24 V	A	6
— at 230 V	A	6
● at AC-15		
— at 24 V	A	3
— at 230 V	A	3
● at DC-13		
— at 24 V	A	1
— at 110 V	A	0.2
— at 220 V	A	0.1
Installation/ mounting/ dimensions		
mounting position		any
fastening method		direct mounting
width	mm	45
height	mm	35
depth	mm	50
Connections/ Terminals		
type of connectable conductor cross-sections		

Subject to change without notice
© Copyright Siemens

● for auxiliary contacts	
— solid	2x (0.5 ... 1.5 mm²), 2x (0.75 ... 2.5 mm²)
— finely stranded	
— with core end processing	2x (0.5 ... 1.5 mm²)

Certificates/ approvals

General Product Approval				EMC	Test Certificates
CSA	CCC	UL	EAC	RCM	Type Test Certificates/Test Report

Marine / Shipping

ABS | BUREAU VERITAS | DNV | LRS | PRS | RINA

Marine / Shipping	other	Railway
RMRS	Confirmation	Vibration and Shock

VDE

Further information

Information- and Downloadcenter (Catalogs, Brochures,…)
https://www.siemens.com/ic10
Industry Mall (Online ordering system)
https://mall.industry.siemens.com/mall/en/en/Catalog/product?mlfb=3RH2924-1GP11
Cax online generator
http://support.automation.siemens.com/WW/CAXorder/default.aspx?lang=en&mlfb=3RH2924-1GP11
Service&Support (Manuals, Certificates, Characteristics, FAQs,...)
https://support.industry.siemens.com/cs/ww/en/ps/3RH2924-1GP11
Image database (product images, 2D dimension drawings, 3D models, device circuit diagrams, EPLAN macros, ...)
http://www.automation.siemens.com/bilddb/cax_de.aspx?mlfb=3RH2924-1GP11&lang=en

Subject to change without notice
© Copyright Siemens

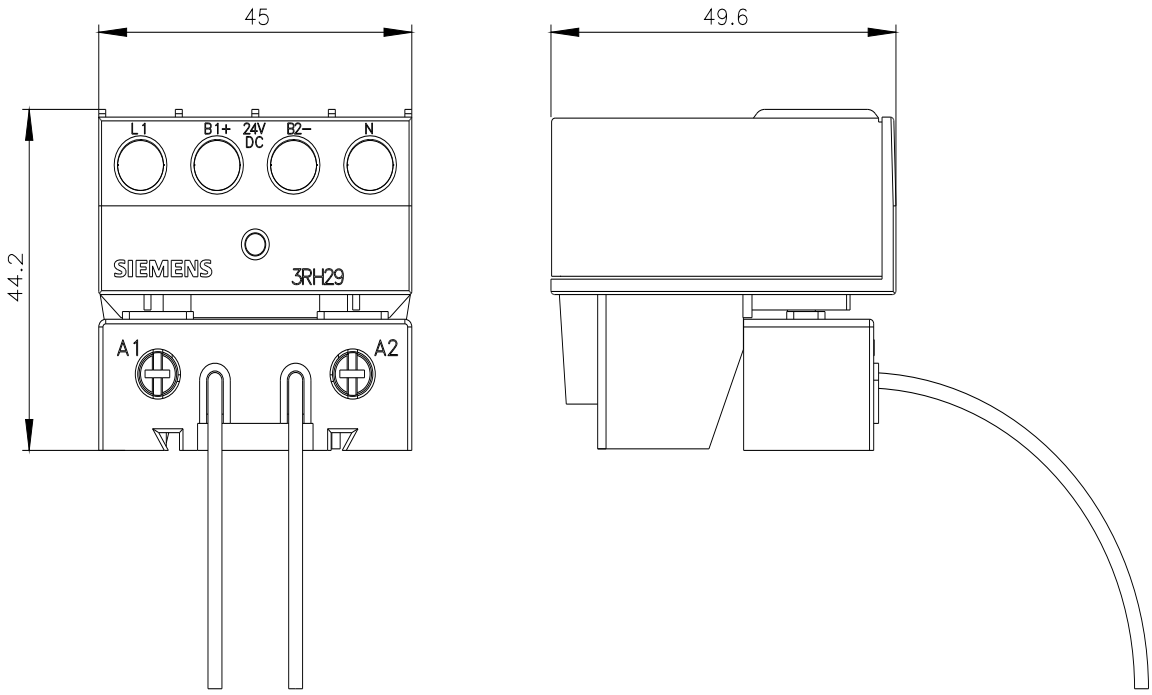

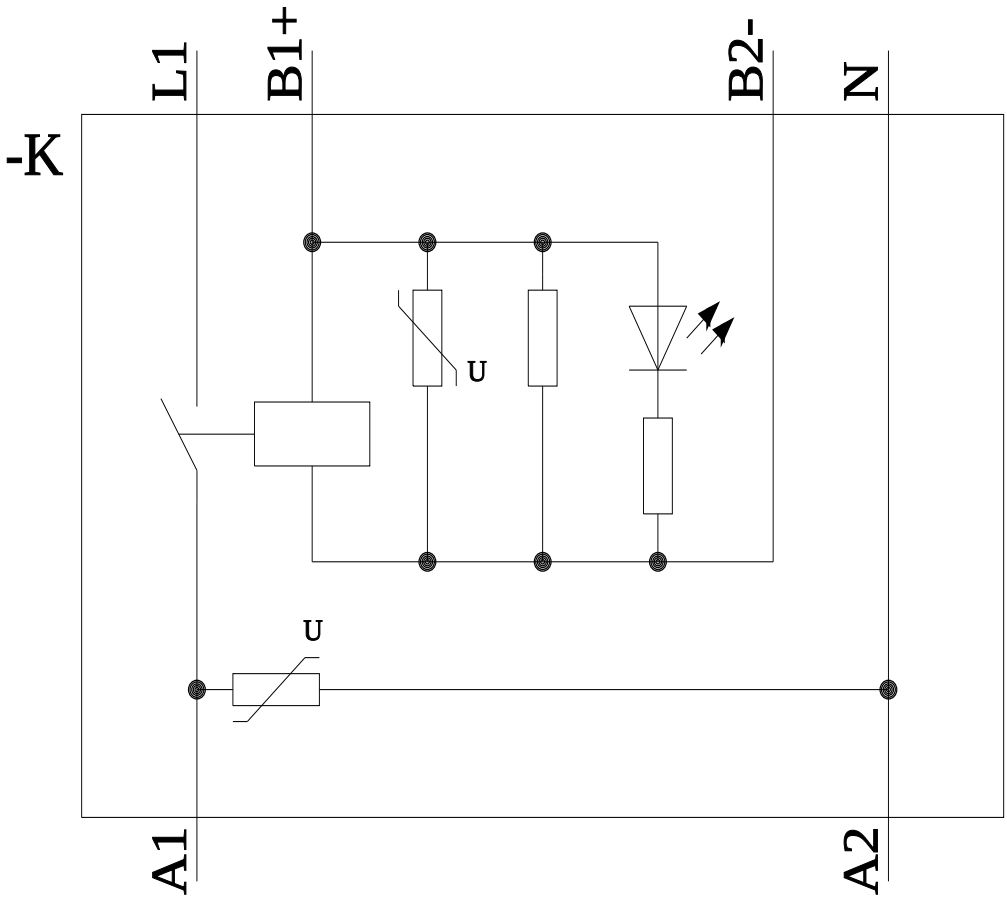

last modified: 12/21/2020

Subject to change without notice
© Copyright Siemens