PCE data sheet

article#	**2411-ssc**
article description	**Taurus2 rubber safety connector cap fb SH IP54 (black)**
description long	Safety connector series Taurus2 - rubber with cap color (housing/ring/cover): black/black/black material (housing/contact carrier): TPE/PA6 earthing system: French/Belgian with shutter 16A / 250V AC / 3p (2P+E), protection rating: IP54
GTIN (EAN)	9003399469053
country of origin	AT
customs number	85366990
packaging quantitiy	20
minimum order quantitiy	200





ETIM 7.0	EC001327
Model	Earthing pin
Material	Rubber
Material quality	Thermoplastic
For heavy conditions (in accordance with VDE)	True
Degree of protection (IP)	IP54
Angle of plug	Straight
Connection system	Screwed terminal
Colour	Black
Number of poles	3
Nominal voltage	250 V
Nominal current	16 A

K (cable Ø)	6-13 mm
wire flexible	1-2,5 mm²
contact screws	80 Ncm
strain relief	110 Ncm
dismantling length	30 mm
stripping length	7 mm

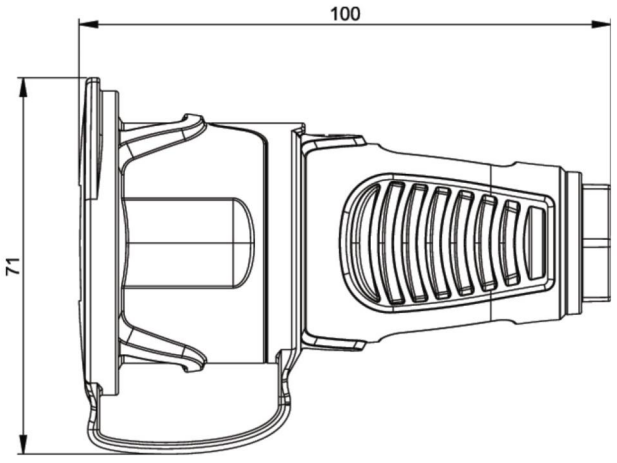

www.manufacturer-safety.info

3/3/2021

(C) PC ELECTRIC Ges.m.b.H. - Diesseits 145 - 4973 St. Martin i.l. - Austria - www.pcelectric.at