Pushing Performance
Since 1945

Han hinged frame plus, for 6 modules A-F

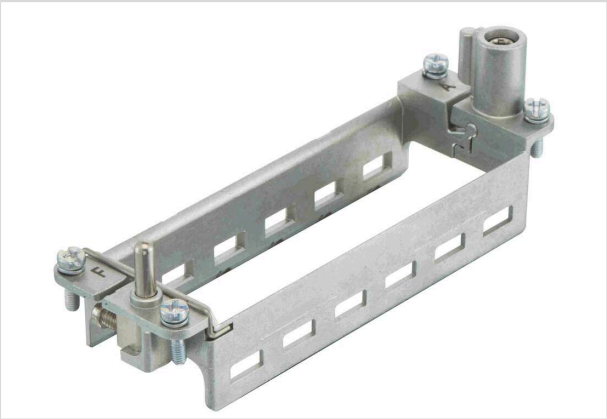

Image is for illustration purposes only. Please refer to product description.

Part number	09 14 024 0361
Specification	Han hinged frame plus, for 6 modules A-F
HARTING eCatalogue	https://b2b.harting.com/09140240361

Identification

Category	Accessories
Series	Han-Modular®
Type of accessory	Hinged frame plus
Description of the accessory	for 6 modules A ... F
Features	Conductor cross-section PE (power side) 4 ... 10 mm² Conductor cross-section PE (signal side) 1 ... 2.5 mm²

Version

Size	24 B

Technical characteristics

Limiting temperature	-40 ... +125 °C
Mating cycles	≥500

Material properties

Material	Zinc die-cast Stainless steel
RoHS	compliant with exemption
RoHS exemptions	6(c): Copper alloy containing up to 4 % lead by weight
ELV status	compliant with exemption
China RoHS	50
REACH Annex XVII substances	Not contained
REACH ANNEX XIV substances	Not contained

Pushing Performance
Since 1945

Material properties

REACH SVHC substances	Yes
REACH SVHC substances	Lead
ECHA SCIP number	564b7d75-7bf6-4cfb-acb1-2168eb61b675
California Proposition 65 substances	Yes
California Proposition 65 substances	Lead

Specifications and approvals

Specifications	IEC 60664-1 IEC 61984
Approvals	DNV GL
UL / CSA	UL 1977 ECBT2.E235076

Commercial data

Packaging size	1
Net weight	80.22 g
Country of origin	Germany
European customs tariff number	85389099
GTIN	5713140161801
eCl@ss	27440206 Module carrier frame for industrial connectors