KombiSIGN 71 / Audible Devices 645

Buzzer element contin/pulse 24VAC/DC BK



Part No.:	**645.800.75**
Series:	**KombiSIGN 71**

MECHANICAL DATA	
Height	72 mm
Diameter	70 mm
Materials	PC
Housing colour	Black
Protection category	IP65
Working temperature minimum	-20°C
Working temperature maximum	+50°C
Weight with packaging	87 g
Product weight	73 g

ELECTRICAL DATA	
Operating voltage	24V
Operating voltage type	AC/DC
Operating voltage frequency	50Hz
Operating voltage tolerance	+/- 10%
Rated operational voltage	24 VDC
Rated operational current	11 mA
Rated inrush current	100 mA
Protection class	Protection class 2
Pollution degree	3

ACOUSTIC DATA	
Volume (max) at 1m distance	85,0 dB (A)
Acoustic signal image	Continuous tone Pulse tone
Audio frequency	3500 Hz
Acoustic service life	5,000 h minimum

APPROVAL DATA	
Conforms with CE	Yes
WEEE	Yes
Conforms with ATEX-directive	No
Conforms with CCC	No
Conforms with UL	cULus
UL Type Rating	Type 12
Conforms with FCC	No
Conforms with IC	No
EAC certificate available	Yes
Conforms with UKCA (Importer)	Yes (WERMA (UK) Ltd.)

! For additional installation and mounting information, refer to the appropriate user guide at www.werma.com. This printed copy is for information only and is subject to alteration.

KombiSIGN 71 / Audible Devices 645

Buzzer element contin/pulse 24VAC/DC BK

Conforms with CMIM	No
Conforms with AS-I	No
ICAO Certification	No
Conforms with DNV	No
Conforms with RoHS CN	No
Conforms with VdS	No

DRAWING

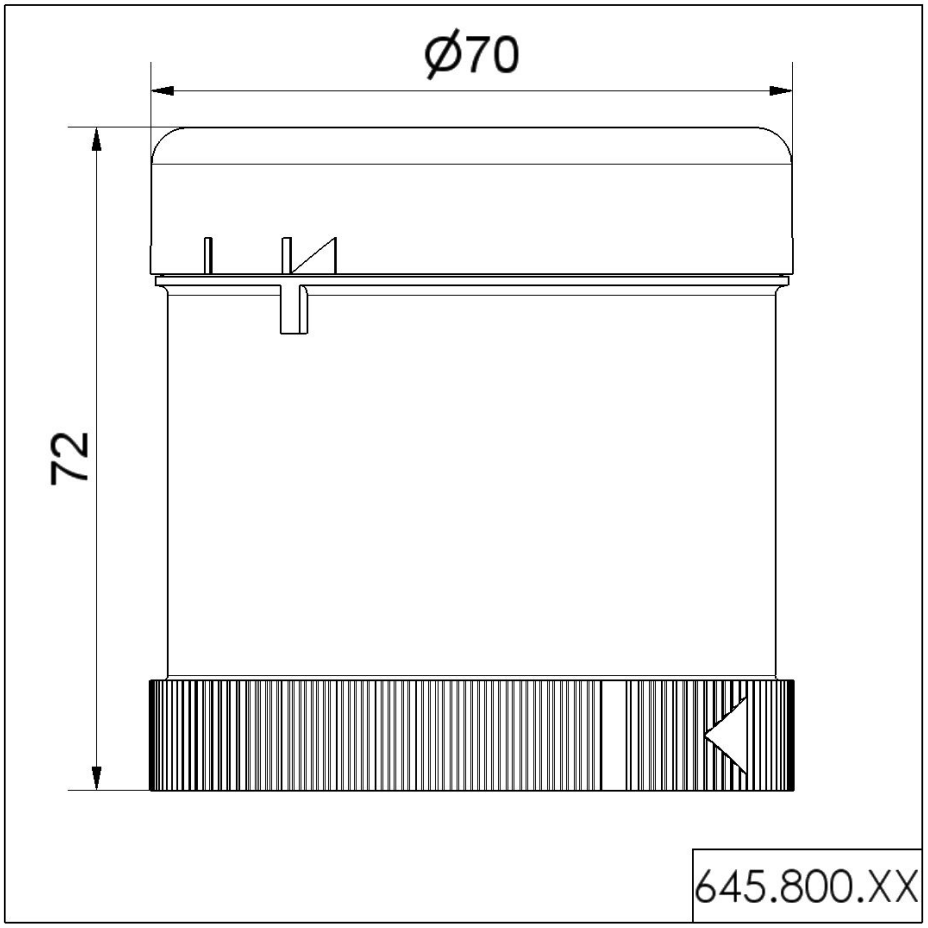

! For additional installation and mounting information, refer to the appropriate user guide at www.werma.com. This printed copy is for information only and is subject to alteration.