

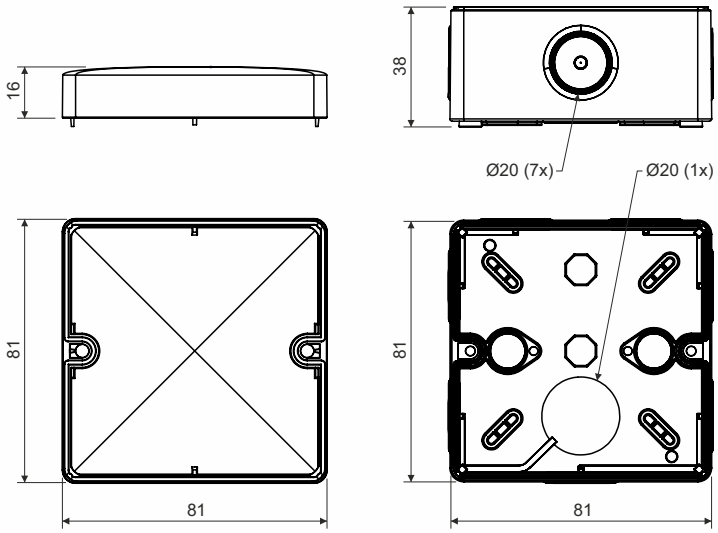

product description:

intended for installation in environments that require IP 66 protection
made from UV-resistant material
integrated knockouts for mounting on base
perfect sealing of cables and pipes
integrated O-ring to install cable glands
intended for direct installation on the surface without having to support with insulating pad
stainless steel screws for lid installation
the option to install special terminal block S-KSK 1
8x inlets with Ø20 mm

material - box: PP (halogen-free, Pb-free material)

material - cover: PA (halogen-free, Pb-free material)

self-snuffing: yes, within 30 s

temperature resistance: -25 - +60 °C

flaming loop test: 850 °C

fire class for underlying material: A1-F

protection types: IP 66

weight: 86 g

meets the requirements: EN 60 670-1

storage: ČSN 64 0090

KSK 80_KA - light gray RAL 7035, plugs and lid screws inserted in the box, each box packed in shrink foil and labelled; 60 pcs of boxes in cardboard

KSK 80_FA - black, plugs and lid screws inserted in the box, each box packed in shrink foil and labelled; 60 pcs of boxes in cardboard

accessories:

terminal plate S-66
terminal plate S-KSK-1
screwless terminal plates TYP015, TYP016, TYP017, TYP018