Product data sheet

Specifications



Cat’s whisker

XCE106C

Main

Range of product	OsiSense XC
Series name	Basic
Product or component type	Limit switch
Product specific application	Medium duty
Device short name	XCE
Body type	Fixed
Head type	Multi-directional head
Material	Plastic and metal
Fixing mode	By the body
Movement of operating head	Multi-directional
Type of operator	Cat""s whisker steel
Switch actuation	By any moving part
Type of approach	Multi-directional approach
Electrical connection	Screw-clamp terminals, clamping capacity: 1 x 1.5 mm²
Cable entry	1 flexible rubber cable gland, cable outer diameter: 6…9 mm
Number of poles	2
Contact operation	Snap action
Positive opening	Without
Maximum force for tripping	1.5 N

Complementary

Contacts insulation form	Za
Minimum release force	0.04 N
Minimum actuation speed	5 mm/s
Maximum actuation speed	1 m/s
Maximum operating rate	120 cyc/mn
Contact code designation	A300, AC (Ue = 240 V), Ie = 3 A, Ithe = 10 A conforming to IEC 60947-5-1 R300, DC (Ue = 220 V), Ie = 0.3 A conforming to IEC 60947-5-1
Maximum resistance across terminals	25 MOhm

Disclaimer: This documentation is not intended as a substitute for and is not to be used for determining suitability or reliability of these products for specific user applications

[Uimp] rated impulse withstand voltage	4 kV conforming to EN/IEC 60664
Electrical durability	800000 cycles, AC, 3 A, 220 V
Mechanical durability	10000000 cycles
Width	28 mm
Height	170 mm
Depth	25 mm
Net weight	0.11 kg
Terminals description ISO n°1	(3-4-1-2)OF

Environment

Shock resistance	30 gn for 11 ms conforming to IEC 60068-2-27
Vibration resistance	+/- 3 mm (f= 10…55 Hz) conforming to IEC 60068-2-6
IP degree of protection	IP65 conforming to IEC 60529
Electrical shock protection class	Class I conforming to EN/IEC 60947-5-1
Ambient air temperature for operation	-25…70 °C
Ambient air temperature for storage	-40…70 °C
Marking	CE CCC
Standards	IEC 60947-5-1 GB 14048.5

Packing Units

Unit Type of Package 1	PCE
Number of Units in Package 1	1
Package 1 Height	3.0 cm
Package 1 Width	5.0 cm
Package 1 Length	17.5 cm
Package 1 Weight	134.0 g
Unit Type of Package 2	S02
Number of Units in Package 2	40
Package 2 Height	15.0 cm
Package 2 Width	30.0 cm
Package 2 Length	40.0 cm
Package 2 Weight	5.597 kg
Unit Type of Package 3	P06
Number of Units in Package 3	640
Package 3 Height	75.0 cm
Package 3 Width	80.0 cm
Package 3 Length	60.0 cm
Package 3 Weight	97.552 kg

Offer Sustainability

REACh Regulation	REACh Declaration

EU RoHS Directive	Pro-active compliance (Product out of EU RoHS legal scope) EU RoHS Declaration
Mercury free	Yes
RoHS exemption information	Yes
California proposition 65	WARNING: This product can expose you to chemicals including: Diisononyl phthalate (DINP), which is known to the State of California to cause cancer, and Di-isodecyl phthalate (DIDP), which is known to the State of California to cause birth defects or other reproductive harm. For more information go to www.P65Warnings.ca.gov

Contractual warranty

Warranty	18 months

Dimensions

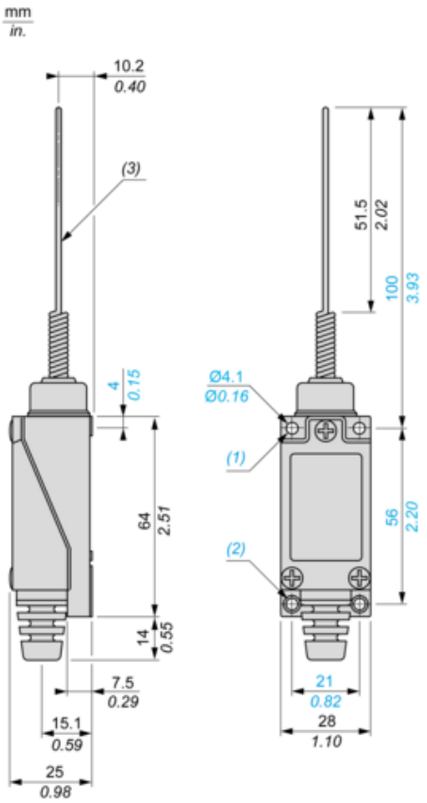

(1) : 2 holes M5 tapped 7mm / 0.27 inches in depth.

(2) : 2 M5 tapped holes.

(3) : Stainless steel wire Ø 1.2 mm / Ø 0.04 in.

Connection and Schema

Wiring Diagram

1 NO + 1 NC

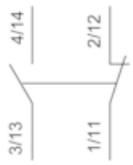

Technical Description

Type of Operator and Functional Diagram, Travel Distance

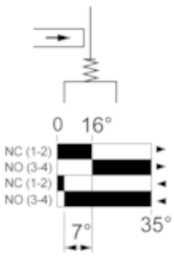

(1)
(2)
(3)
(4)

(1) : Contact closed

(2) : Contact open

(3) : Tripping

(4) : Resetting

Recommended replacement(s)