Product data sheet

Specifications



Thermoplastic roller lever

XCE118C

Main

Range of product	OsiSense XC
Series name	Basic
Product or component type	Limit switch
Product specific application	Medium duty
Device short name	XCE
Body type	Fixed
Head type	Rotary head
Material	Plastic and metal
Fixing mode	By the body
Movement of operating head	Rotary
Type of operator	Spring return roller lever thermoplastic
Switch actuation	By 30° cam
Type of approach	Lateral approach, 2 directions
Electrical connection	Screw-clamp terminals, clamping capacity: 1 x 1.5 mm²
Cable entry	1 flexible rubber cable gland, cable outer diameter: 6…9 mm
Number of poles	2
Contact operation	Snap action
Positive opening	Without
Maximum force for tripping	7.5 N

Complementary

Contacts insulation form	Za
Minimum release force	0.5 N
Minimum actuation speed	9 mm/s
Maximum actuation speed	1 m/s
Maximum operating rate	120 cyc/mn
Contact code designation	A300, AC (Ue = 240 V), Ie = 3 A, Ithe = 10 A conforming to IEC 60947-5-1 R300, DC (Ue = 220 V), Ie = 0.3 A conforming to IEC 60947-5-1
Maximum resistance across terminals	25 MOhm

Disclaimer: This documentation is not intended as a substitute for and is not to be used for determining suitability or reliability of these products for specific user applications

[Uimp] rated impulse withstand voltage	4 kV conforming to EN/IEC 60664
Electrical durability	800000 cycles, AC, 3 A, 220 V
Mechanical durability	10000000 cycles
Width	28 mm
Height	124 mm
Depth	41 mm
Net weight	0.153 kg
Terminals description ISO n°1	(3-4-1-2)OF

Environment

Shock resistance	30 gn for 11 ms conforming to IEC 60068-2-27
Vibration resistance	+/- 3 mm (f= 10…55 Hz) conforming to IEC 60068-2-6
IP degree of protection	IP65 conforming to IEC 60529
Electrical shock protection class	Class I conforming to EN/IEC 60947-5-1
Ambient air temperature for operation	-25…70 °C
Ambient air temperature for storage	-40…70 °C
Marking	CE CCC
Standards	IEC 60947-5-1 GB 14048.5

Packing Units

Unit Type of Package 1	PCE
Number of Units in Package 1	1
Package 1 Height	3.0 cm
Package 1 Width	5.0 cm
Package 1 Length	13.0 cm
Package 1 Weight	173.0 g
Unit Type of Package 2	S02
Number of Units in Package 2	50
Package 2 Height	15.0 cm
Package 2 Width	30.0 cm
Package 2 Length	40.0 cm
Package 2 Weight	8.891 kg
Unit Type of Package 3	P06
Number of Units in Package 3	800
Package 3 Height	75.0 cm
Package 3 Width	80.0 cm
Package 3 Length	60.0 cm
Package 3 Weight	150.256 kg

Offer Sustainability

REACh Regulation	REACh Declaration

EU RoHS Directive	Pro-active compliance (Product out of EU RoHS legal scope) EU RoHS Declaration
Mercury free	Yes
RoHS exemption information	Yes
California proposition 65	WARNING: This product can expose you to chemicals including: Diisononyl phthalate (DINP), which is known to the State of California to cause cancer, and Di-isodecyl phthalate (DIDP), which is known to the State of California to cause birth defects or other reproductive harm. For more information go to www.P65Warnings.ca.gov

Contractual warranty

Warranty	18 months

Product data sheet XCE118C

Dimensions Drawings

Dimensions

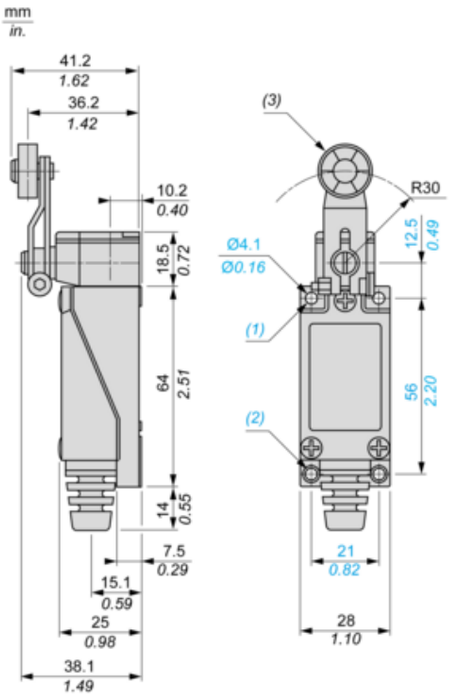

(1) : 2 holes M5 tapped 7 mm / 0.27 inches in depth.

(2) : 2 M5 tapped holes.

(3) : Nylon and metal roller Ø 18 x 7 mm / Ø 0.70 x 0.27 in. (roller can be rotated and locked in any position through 360°)

Connection and Schema

Wiring Diagram

1 NO + 1 NC

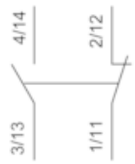

Technical Description

Type of Operator and Functional Diagram, Travel Distance

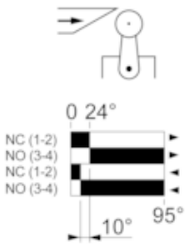

(1)
(2)
(3)
(4)

(1) : Contact closed
(2) : Contact open
(3) : Tripping
(4) : Resetting

Mounting with Roller Lever

Recommended Mounting

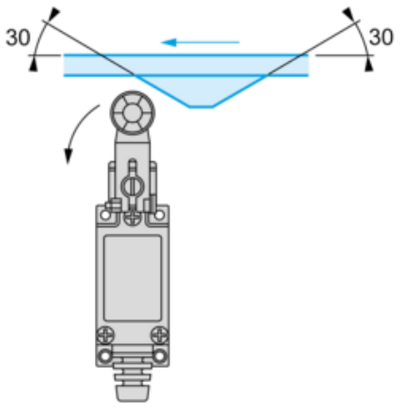

Mounting to be Avoided

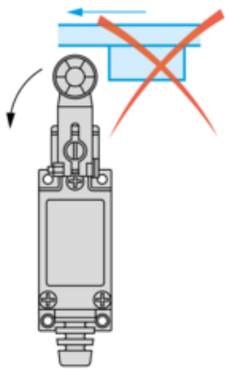

Recommended replacement(s)