Product datasheet

Specifications



single phase power supply, 100...240V input, 24V DC output, 156W, 6,5A

ABL2REM24065K

Main

Range of product	Easy Modicon ABL2
Product or component type	Power supply
Power supply type	Regulated switch mode
Rated power in W	156 W
Main Input Voltage	100...120 V AC single phase 200...240 V
Output voltage	24 V DC
Power supply output current	6.5 A
Operating position	Any position
Vibration resistance	4 gn (f= 10…500 Hz) conforming to EN/IEC 61131-2
Name of test	Electromagnetic hypersensitivity (EHS) conforming to EN 61000-6-2 level A

Complementary

Input voltage limits	176...264 V 88...132 V
Network frequency	47...63 Hz
Inrush current	60 A at 100...120 V AC 60 A at 200...240 V AC
Cos phi	0.45
Efficiency	89 %
Power dissipation in W	19.3 W
Current consumption	1.5 A at 240 V
Input protection type	Integrated fuse (not interchangeable)
Output voltage limits	20.4...27.6 V
Line and load regulation	+/- 1 %
Holding time	>= 35 ms at 115 V
Output protection type	Against overload, protection technology: 1.1...1.5 x In Against short-circuits, protection technology: 1.1...1.5 x In Against overvoltage, protection technology: 28.8...33.6 V Thermal
Connections - terminals	For ground connection: screw type terminals, connection capacity: 1 x 4 mm² AWG 12
Marking	CE

Disclaimer: This documentation is not intended as a substitute for and is not to be used for determining suitability or reliability of these products for specific user applications

Electromagnetic compatibility	Immunity to electromagnetic interference conforming to EN 55022 class B
Mounting support	DIN rail with accessory Panel mounting with accessory
Operating altitude	5000 m
Output coupling	Series
Overvoltage category	II
Meantime between failure [MTBF]	600000 h at 25 °C
Status LED	1 LED (green) output voltage
Width	159 mm
Height	97 mm
Depth	30 mm
Net weight	0.44 kg

Environment

Product certifications	EAC IC RoHS KC RCM
IP degree of protection	IP20 conforming to IEC 62368-1
Ambient air temperature for operation	-30…70 °C (with power derating of 2 % per °C)
Ambient air temperature for storage	-40…85 °C
Relative humidity	10…95 % Class I conforming to IEC 62368-1
Pollution degree	2
Dielectric strength	2000 V between input and ground

Packing Units

Unit Type of Package 1	PCE
Number of Units in Package 1	1
Package 1 Height	3.589 cm
Package 1 Width	10.33 cm
Package 1 Length	16.664 cm
Package 1 Weight	440.0 g
Unit Type of Package 2	S03
Number of Units in Package 2	35
Package 2 Height	30.0 cm
Package 2 Width	30.0 cm
Package 2 Length	40.0 cm
Package 2 Weight	16.47 kg

Offer Sustainability

REACh Regulation	REACh Declaration
REACh free of SVHC	Yes
EU RoHS Directive	Pro-active compliance (Product out of EU RoHS legal scope)

	EU RoHS Declaration
Mercury free	Yes
China RoHS Regulation	China RoHS declaration
RoHS exemption information	Yes

Dimensions Drawings

Mechanical Dimensions

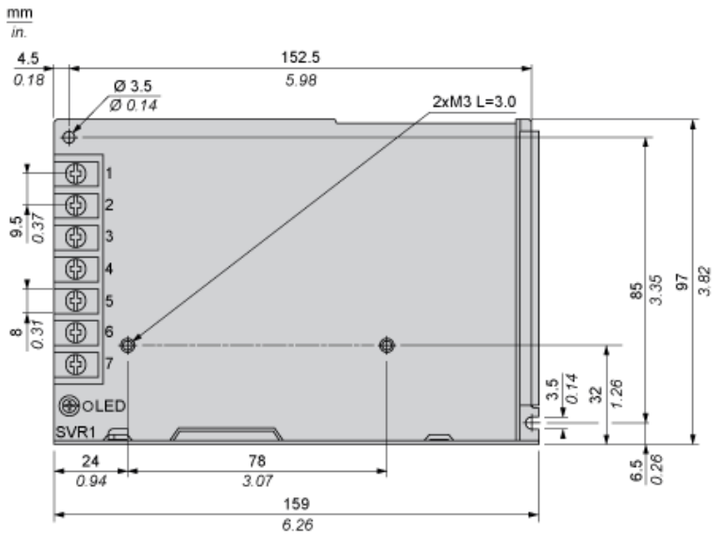

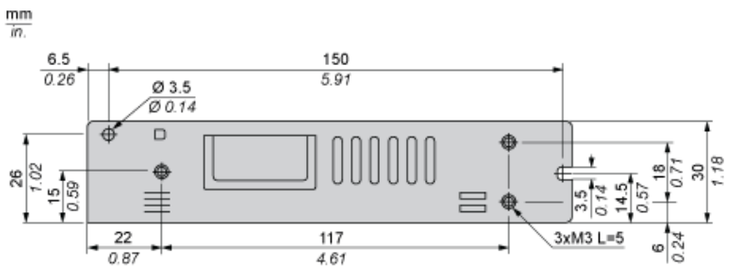

Product datasheet
Mounting and Clearance

ABL2REM24065K

Mounting and Clearance

Vertical Mounting

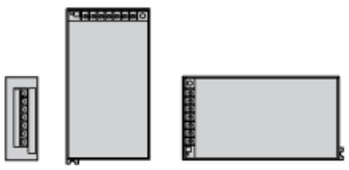

Horizontal Mounting



Clearance

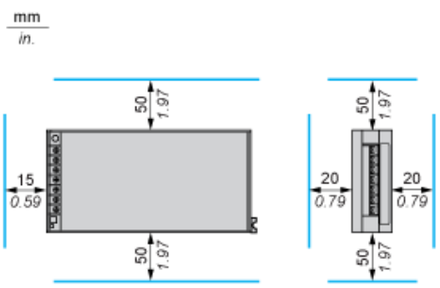

Performance Curves

Static Characteristics

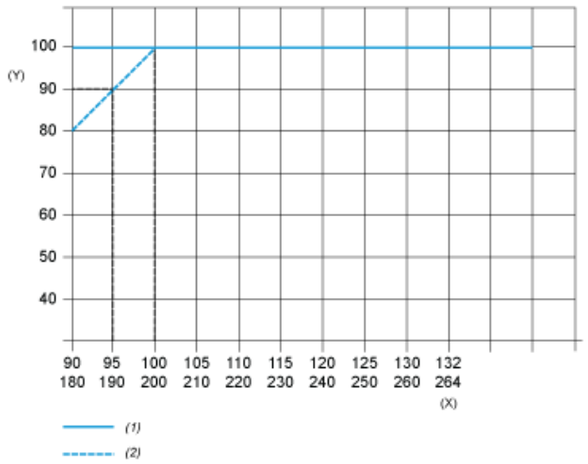

(1) 180 - 264 VAC
(2) 90 - 132 VAC
(y) Load %
(x) Input voltage (VAC) 50/60 Hz

Derating Curve

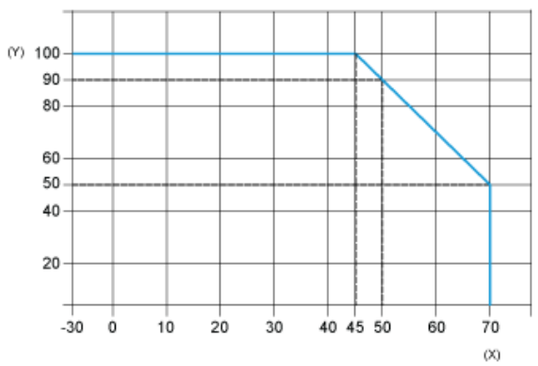

(y) Load %
(x) Ambient temperature (°C)

Recommended replacement(s)