Product data sheet

Specifications



Monolithic tower lights, Harmony XVG, 60mm, red orange green, steady light, buzzer, aluminium tube mounting fixing plate, IP42, 24V AC/DC

XVGB3SH

Main

Range of product	Harmony XVG
Product or component type	Complete pre-wired monolithic tower light
Beacon or indicator bank unit type	3 illuminated units
Material	PC (UL94 V-2): globe ABS (UL94HB): tube body Aluminium: tube
Mounting diameter	60 mm
Component name	XVG
Device mounting	Tube mounting with fixing plate
Light source	LED steady red LED steady green LED steady amber
Light block color	Red/orange/green
Indicator bank base type	Base with integrated buzzer

Complementary

Rated supply voltage	24 V AC/DC
Cable cross section	0.33 mm²
Discrete output type	PNP and NPN
[Uimp] rated impulse withstand voltage	0.5 kV
Current consumption	180 mA
Noise level	85 dB
Power consumption in W	4.1 W
Fundamental frequency	2.64 kHz
Net weight	0.37 kg

Environment

Product certifications	CE EAC
Ambient air temperature for storage	-35…70 °C

Disclaimer: This documentation is not intended as a substitute for and is not to be used for determining suitability or reliability of these products for specific user applications

Ambient air temperature for operation	-10…50 °C
IP degree of protection	IP42

Packing Units

Unit Type of Package 1	PCE
Number of Units in Package 1	1
Package 1 Height	8.3 cm
Package 1 Width	14.5 cm
Package 1 Length	54.6 cm
Package 1 Weight	561.0 g
Unit Type of Package 2	S04
Number of Units in Package 2	8
Package 2 Height	30 cm
Package 2 Width	40 cm
Package 2 Length	60 cm
Package 2 Weight	5.12 kg
Unit Type of Package 3	P06
Number of Units in Package 3	30
Package 3 Height	72 cm
Package 3 Width	60 cm
Package 3 Length	80 cm
Package 3 Weight	27.8 kg

Offer Sustainability

Sustainable offer status	Green Premium product
REACh Regulation	REACh Declaration
REACh free of SVHC	Yes
EU RoHS Directive	Pro-active compliance (Product out of EU RoHS legal scope) EU RoHS Declaration
Mercury free	Yes
China RoHS Regulation	China RoHS declaration
RoHS exemption information	Yes
Environmental Disclosure	Product Environmental Profile
Circularity Profile	End of Life Information
California proposition 65	WARNING: This product can expose you to chemicals including: Lead and lead compounds, which is known to the State of California to cause cancer and birth defects or other reproductive harm. For more information go to www.P65Warnings.ca.gov

Contractual warranty

Warranty	18 months

Product data sheet XVGB3SH

Dimensions Drawings

Dimensions

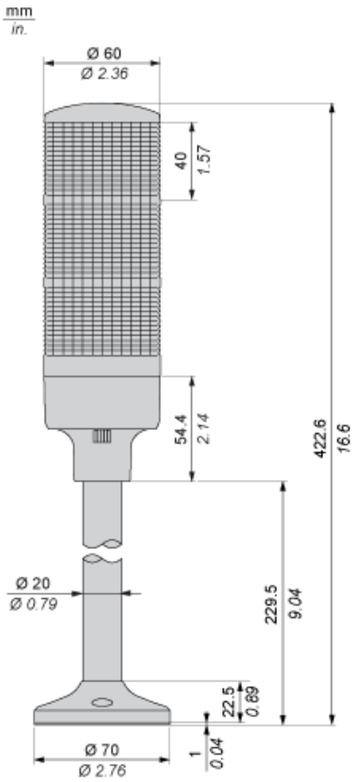

Product data sheet XVGB3SH

Mounting and Clearance

Mounting

Ø54 mm/2.13 in., Standard

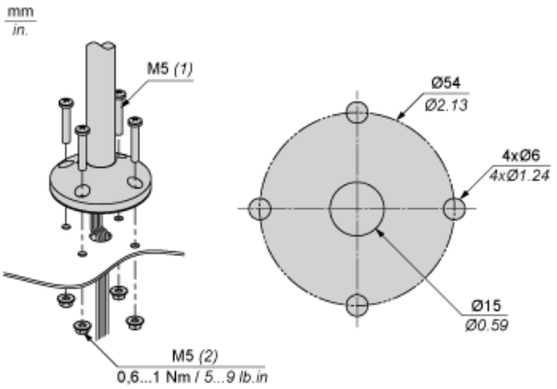

(1) Thickness + 10 mm/0.39 in.
(2) Hexagon Nut with flange

Wiring

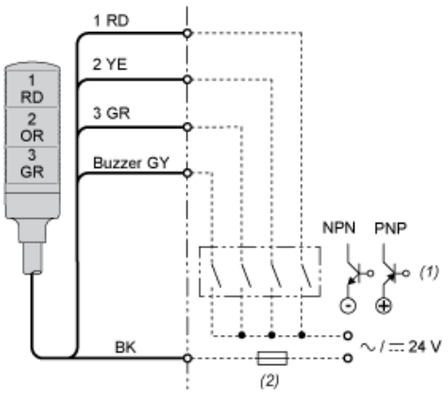

(1) "ON" for lighting and/or applying continuous sound.
(2) Fuse (rated current: 0.5 A)
RD : Red
YE : Yellow
GR : Green
GY : Grey
OR : Orange
BK : Black

Recommended replacement(s)