SMART POWER

Switch-disconnectors OTDC

16...1000A



- Designed for harsh environments
- Compact and modular design
- Reduced power losses

Table of contents

01. Introduction **4**
OTDC switches portfolio overview 6
Overview of product range 7

02. Gearing up your installation **10**
High performance 12
Speed up your projects 14
Efficient design 16
ABB EcoSolutions™ 18

03. OTDC XS-Series **20**
Overview of product range OTDC XS-Series 21
Technical data 23
Ordering information, OTDC XS-Series 25
Ordering information, OTDCP XS-Series 27
OTDC XS and OTDCP XS-Series circuits 28

04. OTDC S-Series **29**
Overview of product range OTDC S-Series 30
Technical data, OTDC S1.0-Series 31
Technical data, OTDC S2.0-Series 32
Ordering information, OTDC S1.0-Series 36
Ordering information, OTDC S2.0-Series 37
OTDC S.1- and S2.0-Series circuits 39

05. OTDC M-Series **40**
Overview of product range OTDC M 41
Technical data 42
Ordering information 46
OTDC M-Series circuits 49

06. OT(M)_-135- Series **50**
Overview of product range OT(M)_-135 50
Technical data 51
Ordering information 52
OT(M)_-135 -Series circuits 53

07. Accessories **54**
DC switch-disconnectors accessory guide for XS-Series 55
DC switch-disconnectors accessory guide for S- and M-Series 56
Ordering information, accessories 57

08. Dimensional drawings **70**
Dimensional drawings, OTDC XS-Series 71
Dimensional drawings, OTDC S1.0-Series 73
Dimensional drawings, OTDC S2.0-Series 74
Dimensional drawings, OTDC M-Series 77
Dimensional drawings, OT(M)_-135 - Series 82
Dimensional drawings, accessories 83

09. Additional resources **91**

01

Introduction

01.1. OTDC switches portfolio overview

01.2. Overview of product range

OTDC switches
Switches for all DC applications

OTDC switch-disconnectors are suitable for many applications

- Solar/PV
- Energy Storage System (ESS)
- EV Charging
- Marine
- DC Microgrids
- DC Datacenters
- Rail
- DC Distribution







DC switches
Portfolio overview

Enclosed XS-Series 16...32 Amperes
Enclosed low current OTDC is IP65 rated. It has a selector handle (I-O/ON-OFF) with cover interlock and defeatable interlock function.



OTDC XS-Series 16...32 Amperes
Low current OTDC is equipped with high thermal capacity for 1000V DC applications. Available for base, door or DIN-rail mounting.



OTDC S1.0-Series 100...250 Amperes
Compact and reliable solution for 1000V DC DC-21B applications. S1.0-Series has one of the smallest power losses on the market. They are an efficient solution for the end application.



OTDC S2.0-Series 100...250 Amperes
Compact, high efficiency DC switch for 1500V DC DC-21B/DC-PV2 applications. This series include variants for 10kA short-circuit applications and unique -ESS variants. The ESS variants are designed and tested with fuses for higher short-circuit applications up to 40kA.



OTDC M-Series 315...1000 Amperes
High performing switch with DC-PV2 ratings up to 800A, with small power losses and compact size. The M-Series includes variants for 10kA short-circuit applications and unique -ESS variants, designed and tested with and without fuses for higher short-circuit applications up to 100kA.



315...800A



800...1000A

OT(M)-135 1600...4000 Amperes
Compact and robust DC disconnecter for 1500V DC DC-20B applications. This series include variants for remote operation. Rated short-time withstand currents up to 100kA.



Overview of product range

Quick selection IEC

Voltage	Circuits	Amperage											
	IEC60947-3	**16**	**25**	**32**	**100**	**160**	**200**	**250**	**315**	**400**	**500**	**630**	**800**	**1000**
Utilization category: **DC-21B** - OTDC XS and OTDCP XS														
660	**Single circuit**													
	Double circuit													
	Triple circuit	OTDC XS		OTDCP XS										
	Order information	Pages 22-23		Page 24										
Utilization category: **DC-21B** - OTDC XS, OTDCP XS and OTDC S1.0 **DC-PV2** - OTDC M														
1000[*)]	**Single circuit**													
		OTDC XS		OTDCP XS		OTDC S1.0				OTDC M				OTDC M
	Order information	Pages 22-23		Page 24		Page 33				Page 43 Page 45 (**higher SC-ratings**)				Page 43 Page 45 (**higher SC-ratings**)
	Double circuit													
		OTDC XS		OTDCP XS		OTDC S1.0				OTDC M				
	Order information	Pages 22-23		Page 24		Page 33				Page 43				
	Triple circuit													
		OTDC XS				OTDC S1.0				OTDC M				
	Order information	Page 23				Page 33				Page 43				
Utilization category: **DC-21B & DC-PV1** - OTDC S2.0														
1500	**Single circuit**													
						OTDC S2.0				OTDC M				OTDC M
	Order information					Page 34 Page 35 (**higher SC-ratings**)				Page 43 Page 45 (**higher SC-ratings**)				Page 43 Page 45 (**higher SC-ratings**)
	Double circuit													
						OTDC S2.0				OTDC M				
	Order information					Page 31				Page 43				
	Triple circuit													
										OTDC M				
	Order information									Page 43				

*) OTDC S2.0-Series available for 1000V DC Single or Double circuit on request. Higher performance with DV-PV2 ratings available.

Overview of product range

Quick selection IEC

Voltage	Circuits	Amperage			
	IEC60947-3	**1600**	**2500**		**4000**
Utilization category: **DC-20B Manual OT-135**					
1500	**Single circuit**	 OT1600E02-135 Connection type 1	 OT1600E04-135 OT1600E22-135 Connection type 3	 OT2500E02-135 Connection type 1	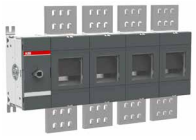 OT2500E04-135 OT2500E22-135 Connection type 3
	Order information	Page 52	Page 52	Page 52	Page 52
	Double circuit	 OT1600E04-135 OT1600E22-135 Connection type 2	 OT2500E04-135 OT2500E22-135 Connection type 2		
	Order information	Page 52	Page 52		
Utilization category: **DC-20B Motorized OTM-135**					
1500	**Single circuit**	 OTM1600E2M230V-135 Connection type 1	 OTM2500E2M230V-135 Connection type 1		 OTM2500E4M230V-135 Connection type 3
	Order information	Page 52	Page 52		Page 52
	Double circuit	 OTM1600E4M230V-135 Connection type 2	 OTM2500E4M230V-135 Connection type 2		
	Order information	Page 52	Page 52		

Overview of product range

Quick selection UL

Voltage	Circuits	Amperage										
	UL98B	16	25	32	100	200	250	320	400	600	800	1000
600	Single circuit											
	Double circuit											
	Triple circuit	OTDC XS										
	Order information	Page 23										
1000*)	Single circuit				 OTDC S1.0		 OTDC M				 OTDC M	
	Order information				Page 33		Page 44 Page 45 (**higher SC-ratings**)				Page 44 Page 45 (**higher SC-ratings**)	
	Double circuit				 OTDC S1.0		 OTDC M					
	Order information				Page 33		Page 44					
	Triple circuit				 OTDC S1.0							
	Order information				Page 33							
1500	Single circuit				 OTDC S2.0			 OTDC M			 OTDC M	
	Order information				Page 31 Page 32 (**higher SC-ratings**)			Page 44 Page 45 (**higher SC-ratings**)			Page 44 Page 45 (**higher SC-ratings**)	
	Double circuit				 OTDC S2.0			 OTDC M				
	Order information				Page 29			Page 40				

*) OTDC S2.0-Series available for 1000V DC Single or Double circuit on request. Higher performance compared to S1.0-Series.

02

Gearing up your installation

02.1. High performance

02.2. Speed up your projects

02.3. Efficient design

02.4. ABB EcoSolutions™

OTDC switch-disconnectors
Gearing up your installation

OTDC switch-disconnectors provide a robust and reliable switching and isolation in a wide variety of applications. Their efficient design makes your operations smoother and more sustainable.



High performance
With OTDC, you can have peace of mind. The unique 2-pole switch design has been optimized to break mid-currents up to 1500V DC easily and reliably, across the complete lifespan of the installation. OTDC switch-disconnectors have been certified according to all main international standards and can be used in demanding conditions.



Speed up your projects
Time is money. With OTDC switch-disconnectors, you have the flexibility to design the best installation and equipment, while decreasing labor time.



Efficient design
OTDC switch-disconnectors have been designed with sustainability in mind when it comes to operation, transportation, and installation. As a result, OTDC has a compact design, high energy efficiency and fast installation. The new optimized bulk package decreases waste without compromising the quality of the product during transportation.

High performance
Robust operation and long lifetime

Robust operation in a wide variety of applications
The complete portfolio from 16A to 1000A complies with all the international standards: IEC 60947, UL98B and CCC. Our OTDC S2.0 and M series fulfill the requirements of AS 60947.3 standard. The OTDC range complies with Marine specific DNV GL standard.

OTDC switch-disconnectors from 100A to 800A fulfill the highest requirements in the IEC standards, such as DC-PV2 utilization category. This means that OTDC can connect and disconnect DC circuits with significant overcurrents and handle bi-directional current flow.

OTDC switch-disconnectors have been tested with and without fuses to fulfill higher short circuit level requirements. Now OTDC can reach up to 100kA short-circuit level with fuses.

IEC standards
DC-PV2
ratings

Short circuit current up to
100kA
with fuses

Reliability – exceptional mechanical endurance
The mechanical endurance of OTDC switch-disconnectors from 100A up to 1000A is 10 000 mechanical operation cycles, which is up to 90% higher than other existing products in the market.

10 000
Operating cycles

High thermal capacity
When selecting DC switch in different DC applications there are many aspects to consider, like enclosure size, cable size, type of connection (busbars or lugs) and ambient temperature inside the enclosure. These have an impact on the thermal capacity of the switch.

OTDC switch-disconnectors have a high thermal capacity, to minimize the derating required in high ambient temperatures. We provide a detailed reference table for the OTDC thermal ratings, based on testing results.

No derating needed up to
75°C
in enclosure

High performance

Pole design that enhances safety, reliability and flexibility

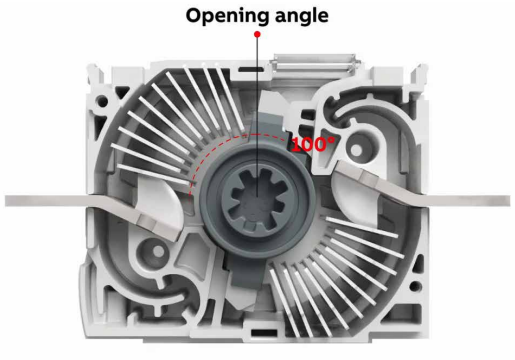

—
Long contact opening angle of 100 degrees – this stretches the electric arc at maximum and improves arc suppression

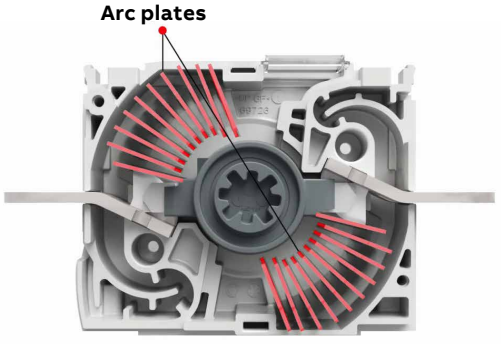

—
Multiple arcing plates in the pole chamber create multiple jumping points in the electric arc



—
The contact design allows a high withstand capability – the higher the current, the more firmly the knife contacts are pushed against the fixed contacts

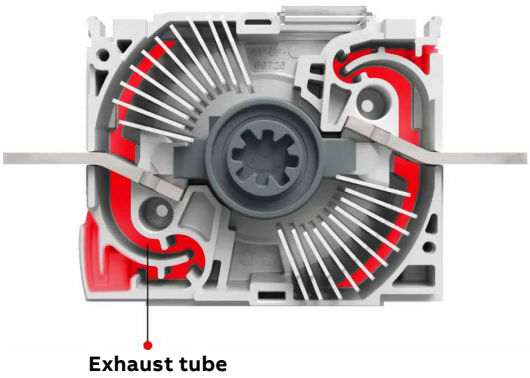

—
The long exhaust tubes prevent leakage of conductive gasses caused by arc flash away from the pole

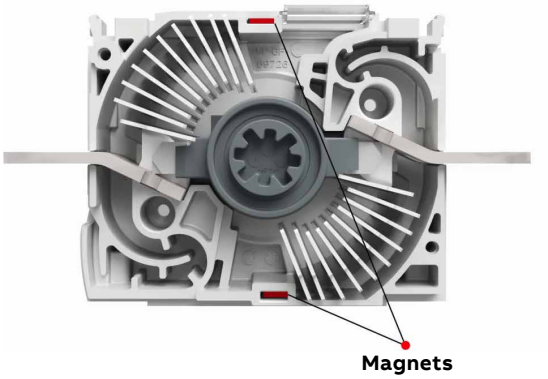

—
Dual Magnetic breaking – the pole chamber includes magnets to optimize arc suppression at the end the arc path

Speed up your projects
Fast and flexible

Switch up to 3x1500 with one device
OTDC's modular design makes it possible to operate more than one 1500V DC circuit simultaneously with one switch, giving you more alternatives to design your installation. You can connect and disconnect up to 3x1500V DC circuits using only one switch in one enclosure.

Switch up to
3x1500V DC
circuits

Front and side operation
The switch can be side or front operated and can be mounted in any direction without significant impact on the performance.



Side operated OTDC switch-disconnector

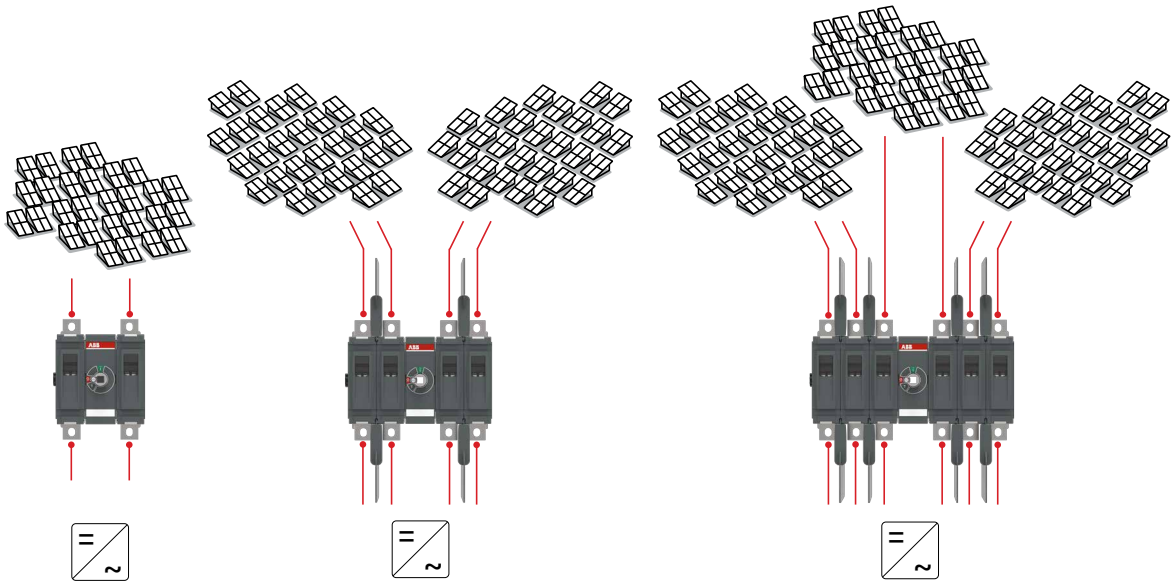

OTDC switch-disconnectors to connect and disconnect one, two and three circuits simultaneously

Speed up your projects
Easy installation

Symmetrical pole design
Thanks to the symmetrical pole design, the power supply and load can be reversed. This simplifies cabling, making it possible to cable from bottom/up or up/bottom.

Easy to install accessories
Cabling can be done with mechanical lugs, electrical lugs, and busbars. The accessories are snap-on mounted and can be installed easily and quickly without using any tools. There is no need to use any connection bars to finalize the installation.

Adjustable shaft
The length of the shaft is adjustable, so no special cutting tools are needed. This feature saves up to 50% installation time per switch.

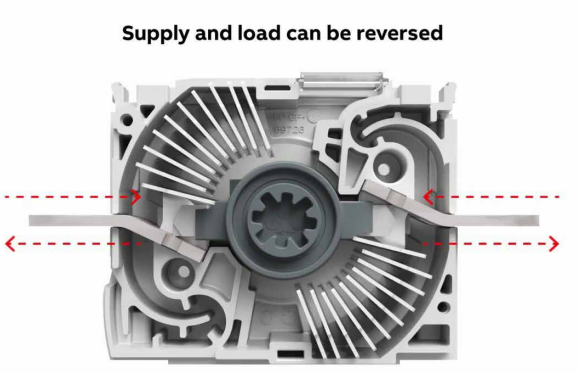

—
The symmetrical pole design allows an easy and flexible design and installation





—
Adjustable shaft that saves installation time

Efficient design
More compact and energy efficient

Compact and powerful
The design of the new OTDC switch-disconnectors has been optimized for a smaller footprint and high performance. The 2D footprint has been decreased up to 80% compared to equivalent solutions in the market.

Up to
80%
more compact

Energy efficiency
A compact size gives you the possibility to use a smaller enclosure, without worrying about power losses. OTDC's design has up to 80% lower power losses compared to equivalent solutions in the market.

Up to
80%
reduced power losses

Energy efficiency label
OTDC's high energy efficiency by the Solar Impulse Foundation. The 315...800A range has received the Energy Efficiency Label, given to efficient and profitable solutions that protect the environment.

—
Learn more about the Solar Impulse Energy Efficiency Label (OTDC 315...800A)



Efficient design
New bulk package

DC projects typically require hundreds of switches to be delivered in the same batch. Now, OTDC comes in a bulk package designed for your convenience, saving labor time and decreasing the amount of waste.

OTDC switch-disconnectors help original equipment manufacturers (OEMs) to improve the efficiency in their products and systems.

Speed up your manufacturing process
Previously, each switch was delivered in a single pack that had to be unpacked individually. With the new bulk package you can save up to 60 seconds of unpacking per switch. This means that if you purchase a bulk package (280 pieces) of 2-pole S2.0 Series switches, you can save up to 4,5 hours time.

Decrease waste
Bulk pack decreases board and paper waste up to 45kg without compromising product quality during transportation.

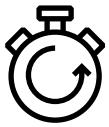

Save up to
4,5
hours



Up to
45kg
less waste

ABB EcoSolutions™
Leading the way to the circular economy

The OTDC switch-disconnectors series has been certified with the ABB EcoSolutions™ label, a significant achievement that reflects our commitment to sustainability and transparency. To help preserve the Earth's resources for future generations, ABB takes a company-wide approach to circularity. We aim to innovate towards new circular business models by cutting waste, increasing recyclability and reusability, and making our products more durable. We work closely with customers and suppliers to embed circularity across the value chain.

ABB's EcoSolutions™ label provides full transparency on a product's circularity value and environmental impact. ABB products with the EcoSolutions label carry an independently verified environmental product declaration (EPD) (ISO 14025) – and comply with a set of key performance indicators defined in ABB's circularity framework.

ABB EcoSolutions: transparency for customers
The ABB EcoSolutions™ label is an assurance that the product is:

- designed to last and manufactured with the maximum amount of sustainably sourced raw materials;
- made with processes that are designed to avoid waste and maximize the use of sustainable packaging materials;
- designed to increase resource and process efficiency while in use, be upgradable and optimize the lifetime of equipment and facilities;
- supported by take-back services leading to refurbishment, re-use or recycling of products and components, and is accompanied by instructions for responsible end-of-life treatment.

EcoSolutions products are evaluated against a clear set of 8 key performance indicators (KPIs) based on these four stages of the product life cycle.

Recycling
End-of-life instructions that help maximize recyclability

Take-Back
Take back services that support refurbishment, re-use or recycling

Lifetime
Longer product or process lifetimes through durable design, maintenance, or upgrades

Efficiency
Improved resource efficiency for customer operations

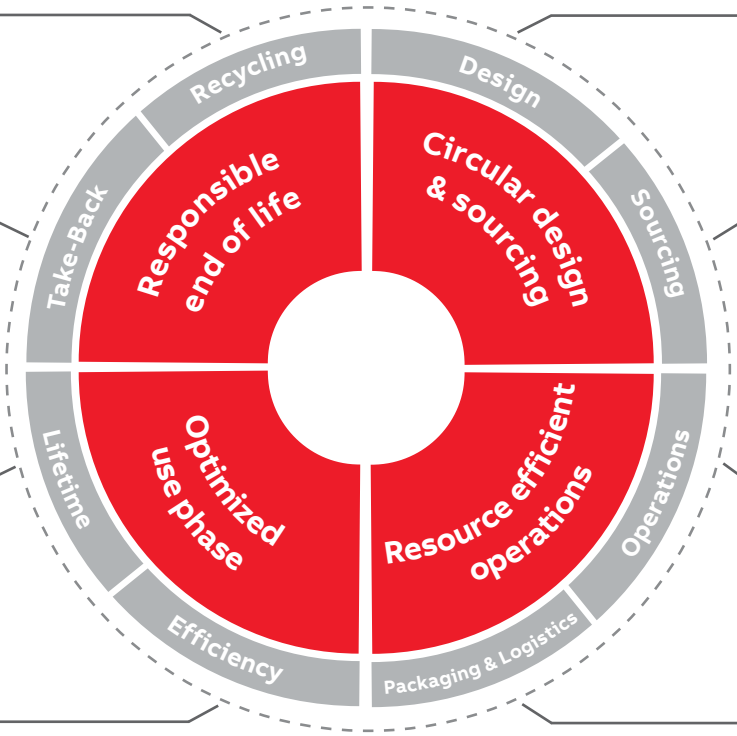

Design concept
Designed for sustainability, durability, and recyclability

Sourcing
Raw materials sourced with maximum sustainable content

Operations
Waste minimized in operations and in projects

Packaging & Logistics
Sustainable or recycled materials optimize packaging and logistics

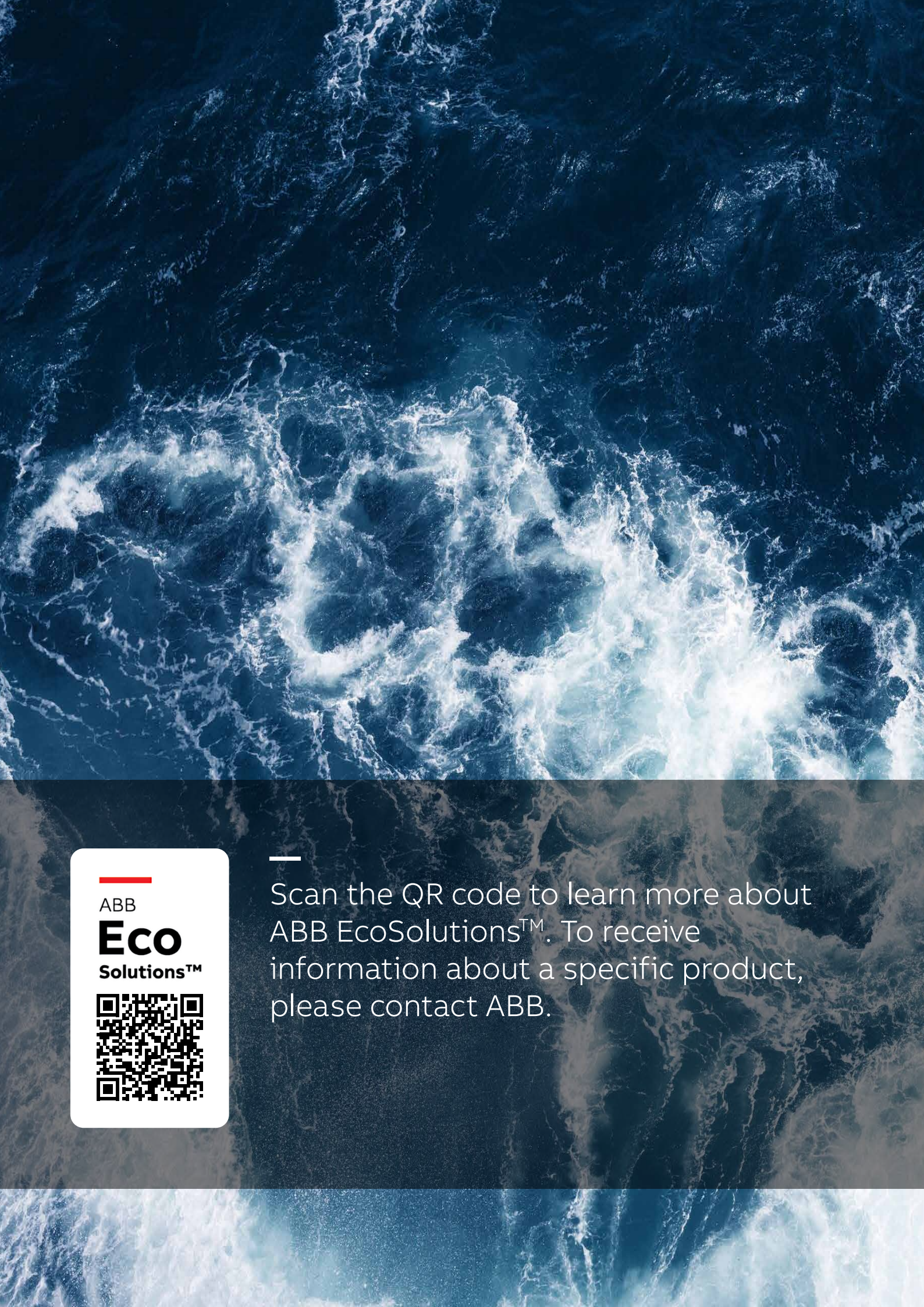

ABB
Eco
Solutions™

Scan the QR code to learn more about ABB EcoSolutions™. To receive information about a specific product, please contact ABB.

03

OTDC XS-Series

03.1. Overview of product range OTDC XS-Series

03.2. Technical data

03.3. Ordering information, OTDC XS-Series

03.4. Ordering information, OTDCP XS-Series

03.5. OTDC and OTDCP XS-Series circuits



Overview of product range

OTDC XS-Series, Type codes and pole configuration table

Understanding the type code keys below will help you quickly identify the correct product for your needs. The simple naming system allows you to see the products type, Ampere rating, standard classification and number of poles, all in one glance.



OTDC16...32U_



OTDC16...32F_

Explanation of the types 16 to 32 Amperes, open version OTDC XS

ABB Brand
DC switch-disconnector

Switch size
Ampere rating (IEC): 16A, 25A & 32A
Ampere rating (UL): 16A, 25A & 32A

OTDC 16 F 3

Standard	
Symbols	
F	IEC 60947-3
FT	Door mounted, IEC 60947-3
U	IEC 60947-3 and UL 508i, Base mounted, non-grounded
US	IEC 60947-3 and UL 508i, Base mounted, non-grounded (includes factory mounted jumpers)
UT	IEC 60947-3 and UL 508i, Door mounted, non-grounded
UST	IEC 60947-3 and UL 508i, Door mounted, non-grounded (includes factory mounted jumpers)

Number of poles	
Symbols	
2	2
3	3
4	4
6	6

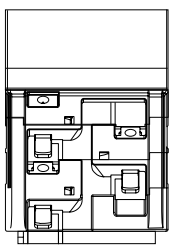

2 pole version

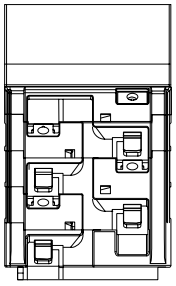

3 pole version

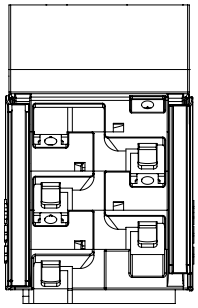

4 pole version

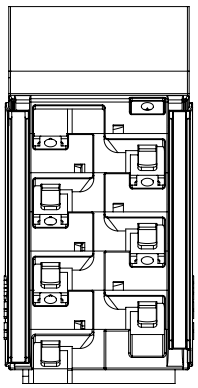

6 pole version

Overview of product range
OTDC XS-Series, Type codes and pole configuration table

Understanding the type code keys below will help you quickly identify the correct product for your needs. The simple naming system allows you to see the products type, Ampere rating, standard classification and number of poles, all in one glance.



OTDCP16...32_

Explanation of the types 16 to 32 Amperes, enclosed version OTDCP XS1.0

ABB Brand
Enclosed DC switch-disconnector

Enclosure material

Symbols	
P	Plastic

Selector handle color

Symbols	
S	Black
SA	Red-yellow

Connection options

Symbols	
Blank	Single circuit use
D	Double circuit use

OTDC P 16 S 11 M D

Switch size

Symbols	
16	16 Amperes
25	25 Amperes
32	32 Amperes

Pole configuration

Symbols	
11	11
12	12
22	22

Cable entries

Symbols	
M	Threaded knock-out M20
M25	Threaded knock-out M25

Technical data
OTDC XS-Series IEC



OTDC16...32F_

Technical data according to IEC 60947 for switch-disconnectors OTDC16...32F_

Switch size				OTDC16F	OTDC25F	OTDC32F
Rated insulation voltage U_i	Pollution degree 2 [1]		V	1250	1250	1250
	Pollution degree 3 [1]		V	1000	1000	1000
Rated impulse withstand voltage			kV	8	8	8
Rated thermal current I_{th}	In open air, normal conditions [2]		A	25	32	45
	In enclosure 40°C		A	25	32	45
	In enclosure 60°C		A	25	32	32
...with cable or bar cross section	Cu		mm^2	4	6	10
Rated operational current / poles in series DC-21B	660V	One circuit	V	16/2P	25/2P	32/2P
						36A/3P
		Two circuits	V	16/2Px2	25/2Px2	32/2Px2
	1000V	One circuit	V	10/2P	16/2P	20/2P
			V	16/3P	25/3P	32/3P
		Two circuits	V	10/2Px2	16/2Px2	20/2Px2
Rated short-time withstand current, 1000V, 1s	R.M.S. -value I_{cw}		kA	0,8	0,8	0,8
Power loss / pole	At rated current		W	0,15	0,3	0,5
Terminal cable size	Cu		mm^2	2.5...16	2.5...16	2.5...16
Terminal tightening torque	Counter torque required		Nm	1.2...1.4	1.2...1.4	1.2...1.4
Operating torque	2P/3P/4P		Nm	0,4...0,8	0,4...0,8	0,4...0,8

[1] When used with external handle. For use with direct mounted handle, see installation instruction.
[2] Normal conditions defined in IEC 60947-1, section 6.1.



OTDCP16...32_

Technical data according to IEC 60947 for enclosed OTDC Switch-disconnectors OTDCP 16...32

Switch size			A	OTDCP16	OTDCP25	OTDCP32
Rated insulation voltage	Pollution degree 2		V	1250	1250	1250
	Pollution degree 3		V	1000	1000	1000
Sielectric strength	50 Hz 1 min		kV	6	6	6
Rated impulse withstand voltage			kV	8	8	8
Rated thermal current I_{th} DC-20	In enclosure 40˚C		A	25	32	45
	In enclosure 60˚C		A	25	32	32
Rated operational current / poles in series DC-21B	660V	One circuit	A	16/2P	25/2P	32/2P
		Two circuits	A	16/2Px2	25/2Px2	32/2Px2
	1000V	One circuit	A	10/2P	16/2P	20/2P
			A	16/3P	25/3P	32/3P
		Two circuit	A	10/2Px2	16/2Px2	20/2Px2
Rated short-time withstand current, 1000V, 1s	R.M.S. -value I_{cw}		kA	0.8	0.8	0.8
Power loss / pole	At rated current		W	0.15	0.3	0.5

Technical data

OTDC XS-Series IEC and UL



OTDC16...32U_

Technical data according to IEC 60947 for switch-disconnectors OTDC16...32U_

Switch size				OTDC16U	OTDC25U	OTDC32U
Rated insulation voltage U_i	Pollution degree 2 [1]		V	1250	1250	1250
	Pollution degree 3 [1]		V	1000	1000	1000
Rated impulse withstand voltage			kV	8	8	8
Rated thermal current I_{th}	In open air, normal conditions [2]		A	40	50	63
	In enclosure 40°C		A	32	40	50
	In enclosure 60°C		A	25	32	40
...with cable or bar cross section	Cu		mm^2	4	6	10
Rated operational current DC-21B / Poles in series	660V	One circuit	V	16/2P	25/2P	32/2P
		Two circuits	V	16/2Px2	25/2Px2	32/2Px2
		Three circuits	V	16/2Px3	25/2Px3	32/2Px3
	1000V [3]	One circuit	V	10/2P	16/2P	20/2P
		Two circuits	V	10/2Px2	16/2Px2	20/2Px2
		Three circuits	V	10/2Px3	16/2Px3	20/2Px3
Rated short-time withstand current, 1000V, 1s	R.M.S. -value I_{cw}		kA	1,0	1,0	1,0
Rated conditional short-circuit current I_p (r.m.s.)	I_p (r.m.s.), 1000V		kA	10	10	10
	Max fuse size, gPV		A	80	80	80
Power loss / pole	At rated current		W	0,1	0,2	0,35
Terminal cable size	Cu		mm^2	2.5...16	2.5...16	2.5...16
Terminal tightening torque	Counter torque required		Nm	1.2...1.4	1.2...1.4	1.2...1.4
Operating torque	2P/4P		Nm	0,4...0,8	0,4...0,8	0,4...0,8
	6P			0,8...1,9	0,8...1,9	0,8...1,9

[1] When used with external handle. For use with direct mounted handle, see installation instruction.
[2] Normal conditions defined in IEC 60947-1, section 6.1.
[3] U and UT types only (Not applicable for US nor UST).

Technical data in accordance to UL508I for photovoltaic disconnect switches OTDC16...32U_
Suitable for use in photovoltaic systems in accordance with article 690 of the NEC.

Switch size				OTDC16U	OTDC25U	OTDC32U
UL Listed	Standard			UL508i	UL508i	UL508i
Rated ambient temperature			°C	-20...+60	-20...+60	-20...+60
Rated current / Poles in series	600V	One circuit	A	16/2P	25/2P	
		Two circuits	A	16/2Px2	25/2Px2	32/2Px2
		Three circuits	A	16/2Px3		
Short circuit rating	600V		kA	5	5	5
Protection type	Max fuse size, RK5 fuse		A	80	80	80
Wire range				AWG 12-6	AWG 12-6	AWG 12-6
Technical data according to IEC 60947	See IEC table for type			OTDC16U	OTDC25U	OTDC32U

Ordering information, IEC

OTDC XS-Series 16…32A



OTDC16...32F_



OTDC16...32FT_

Switch-disconnectors OTDC XS-Series, base, DIN-rail or door mounting, IEC
OTDC16…32F_ base or DIN-rail mounted types include IP20 protected terminal clamps and knob handles.

Rated operational current [A] DC-21B		Number of circuits	Circuit	Number of poles	Type	Order code
600V DC	1000V DC					
Base or DIN-rail mounting						
16	10	1	2a, 2b	2	OTDC16F2	1SCA121454R1001
16	16	1	5a	3	OTDC16F3	1SCA121457R1001
25	16	1	2a, 2b	2	OTDC25F2	1SCA121455R1001
25	25	1	5a	3	OTDC25F3	1SCA121458R1001
32	20	1	2a, 2b	2	OTDC32F2	1SCA121456R1001
32	32	1	5a	3	OTDC32F3	1SCA121459R1001
16	10	2	4a, 4c	4	OTDC16F4	1SCA121461R1001
25	16	2	4a, 4c	4	OTDC25F4	1SCA121462R1001
32	20	2	4a, 4c	4	OTDC32F4	1SCA121463R1001
Door mounting						
16	10	1	2a, 2b	2	OTDC16FT2	1SCA123839R1001
-	16	1	5a	3	OTDC16FT3	1SCA123840R1001
25	16	1	2a, 2b	2	OTDC25FT2	1SCA123842R1001
-	25	1	5a	3	OTDC25FT3	1SCA123843R1001
32	20	1	2a, 2b	2	OTDC32FT2	1SCA123845R1001
-	32	1	5a	3	OTDC32FT3	1SCA123846R1001
16	10	2	4a, 4c	2	OTDC16FT4	1SCA123841R1001
25	16	2	4a, 4c	2	OTDC25FT4	1SCA123844R1001
32	20	2	4a, 4c	2	OTDC32FT4	1SCA123847R1001

The circuits can be found in page 25.
You can find the accessories starting from page 47 and dimensional drawings starting from page 61.

Ordering information, IEC and UL

OTDC XS-Series 16…32A



OTDC16...32F_

Switch-disconnectors OTDC XS-Series, base or DIN-rail mounting, IEC and UL
OTDC16…32U include IP20 protected terminal clamps.

Rated operational current [A]						Single packed	
UL 508i	IEC 60947-3, DC-21B		Number of circuits	Circuit	Number of poles	Type	Order code
600V DC	660V DC	1000V DC					
Base or DIN-rail mounting							
16	16	10	1	2a, 2b	2	OTDC16U2	1SCA134369R1001
25	25	16	1	2a, 2b	2	OTDC25U2	1SCA134375R1001
16	16	10	2	4a, 4c	4	OTDC16U4	1SCA134370R1001
25	25	16	2	4a, 4c	4	OTDC25U4	1SCA134377R1001
32	32	20	2	4a, 4c	4	OTDC32U4	1SCA136703R1001
16	16	10	3	7a,7e	6	OTDC16U6	1SCA134371R1001
Door mounting							
16	16	10	1	2a, 2b	2	OTDC16UT2	1SCA134387R1001
25	25	16	1	2a, 2b	2	OTDC25UT2	1SCA134388R1001
16	16	10	2	4a, 4c	4	OTDC16UT4	1SCA134390R1001
25	25	16	2	4a, 4c	4	OTDC25UT4	1SCA134391R1001
32	32	20	2	4a, 4c	4	OTDC32UT4	1SCA136705R1001
16	16	10	3	7a,7e	6	OTDC16UT6	1SCA134580R1001

The circuits can be found in page 25.
You can find the accessories starting from page 47 and dimensional drawings starting from page 61.

Ordering information, IEC

OTDCP XS-Series 16…32 Amperes



OTDCP16...32SA_



OTDCP16...32S_

Enclosed Switch-disconnectors OTDCP XS-Series
The delivery includes a selector handle (I-O/ON-OFF) with cover interlock and defeatable interlock function.
Auxiliary contacts not included. Plastic enclosure is IP65 rated.

Rated operational current [A] DC-21B 660V DC	1000V DC	Handle color	Cable outlets	Number of circuits	Circuit	Number of poles	Type	Order code
16	10	Red-yellow	M20	1	2a, 2b	2	OTDCP16SA11M	1SCA125126R1001
25	16	Red-yellow	M20	1	2a, 2b	2	OTDCP25SA11M	1SCA125127R1001
32	20	Red-yellow	M20	1	2a, 2b	2	OTDCP32SA11M	1SCA125128R1001
16	10	Black	M20	1	2a, 2b	2	OTDCP16S11M	1SCA125129R1001
25	16	Black	M20	1	2a, 2b	2	OTDCP25S11M	1SCA125130R1001
32	20	Black	M20	1	2a, 2b	2	OTDCP32S11M	1SCA125131R1001
16	16	Red-yellow	M20	1	5a	3	OTDCP16SA12M	1SCA125150R1001
25	25	Red-yellow	M20	1	5a	3	OTDCP25SA12M	1SCA125151R1001
32	32	Red-yellow	M20	1	5a	3	OTDCP32SA12M	1SCA125152R1001
16	16	Black	M20	1	5a	3	OTDCP16S12M	1SCA125153R1001
25	25	Black	M20	1	5a	3	OTDCP25S12M	1SCA125154R1001
32	32	Black	M20	1	5a	3	OTDCP32S12M	1SCA125155R1001
16	16	Red-yellow	M25	1	6c	4	OTDCP16SA22M25	1SCA144900R1001
25	25	Red-yellow	M25	1	6c	4	OTDCP25SA22M25	1SCA144902R1001
32	32	Red-yellow	M25	1	6c	4	OTDCP32SA22M25	1SCA144904R1001
16	16	Red-yellow	M20	1	6c	4	OTDCP16SA22M	1SCA125094R1001
25	25	Red-yellow	M20	1	6c	4	OTDCP25SA22M	1SCA125091R1001
32	32	Red-yellow	M20	1	6c	4	OTDCP32SA22M	1SCA125090R1001
16	16	Black	M20	1	6c	4	OTDCP16S22M	1SCA125095R1001
25	25	Black	M20	1	6c	4	OTDCP25S22M	1SCA125092R1001
32	32	Black	M20	1	6c	4	OTDCP32S22M	1SCA125093R1001
16	10	Red-yellow	M20	2	4a, 4c	4	OTDCP16SA22MD	1SCA131850R1001
25	16	Red-yellow	M20	2	4a, 4c	4	OTDCP25SA22MD	1SCA131851R1001
32	20	Red-yellow	M20	2	4a, 4c	4	OTDCP32SA22MD	1SCA131852R1001
16	10	Black	M20	2	4a, 4c	4	OTDCP16S22MD	1SCA131730R1001
25	16	Black	M20	2	4a, 4c	4	OTDCP25S22MD	1SCA131731R1001
32	20	Black	M20	2	4a, 4c	4	OTDCP32S22MD	1SCA131732R1001

The circuits can be found in the next page.
You can find the accessories starting from page 47 and dimensional drawings starting from page 61.

Ordering information, IEC

OTDC XS and OTDCP XS circuits

Single circuit 2a, 2b

2-pole, 4-wire, 1-circuit

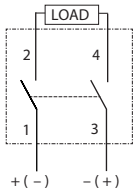

2-pole, 4-wire, 1-circuit
REVERSED SUPPLY

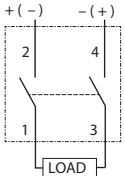

Single circuit 5a

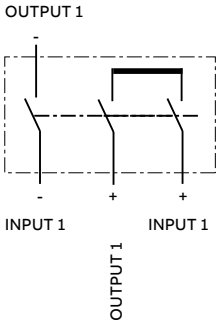

Single circuit 6c

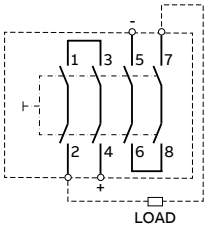

Double circuit 4a, 4c

4-pole, 4-wire, 2-circuit

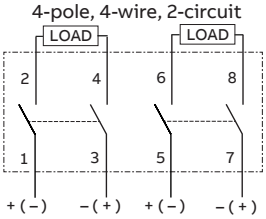

4-pole, 4-wire, 2-circuit
REVERSED SUPPLY

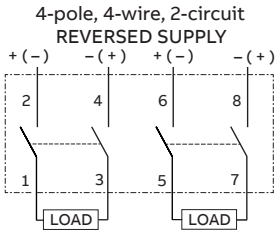

Triple circuit 7a, 7c

6-pole, 12-wire, 3-circuit

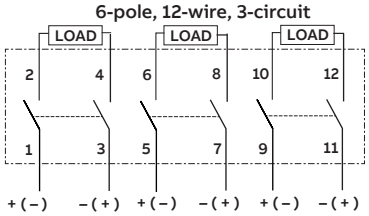

6-pole, 12-wire, 3-circuit
REVERSED SUPPLY

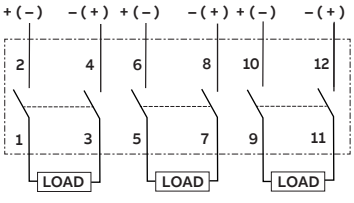

04

OTDC S-Series

04.1. Overview of product range OTDC S-Series

04.2. Technical data, OTDC S1.0-Series

04.3. Technical data, OTDC S2.0-Series

04.4. Ordering information, OTDC S1.0-Series

04.5. Ordering information, OTDC S2.0-Series

04.6. OTDC S.1 and S2.0-Series circuits





Overview of product range OTDC S-Series
Type codes and pole configuration table

Understanding the type code keys below will help you quickly identify the correct product for your needs. The simple naming system allows you to see the products type, Ampere rating, standard classification and number of poles, all in one glance.

Explanation of the types OTDC S1.0 and OTDC S2.0-Series from 100A up to 250A (IEC and UL98B)

ABB Brand
DC switch-disconnector

Switch size/Ampere rating

Symbols	
IEC	100A, 160A, 200A, 250A
UL	100A, 200A, 250A

Voltage

Symbols	
Blank	1000V DC
V	1500V DC

Application

Symbols	
Blank	Short-circuit ratings ≤10kA
ESS	Short-circuit ratings >10kA *)

OTDC 200 G V 11 S -ESS

Standard

Symbols OTDC S1.0-Series	
E	IEC 60947
U	UL98B and IEC60947
Symbols OTDC S2.0-Series	
G	IEC 60947
UG	UL98B and IEC60947

Number of poles

Symbols	
11	Two poles, mechanism between the poles
02	Two poles, mechanism at the end of the switch
22	Four poles, mechanism between the poles
33	Six poles, mechanism between the poles

Operation mode

Symbols	
Blank	Front operation (handle not included)
S	Side operation (handle not included)

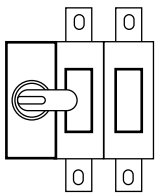

Configuration 02

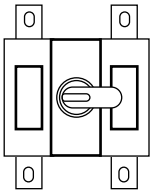

Configuration 11

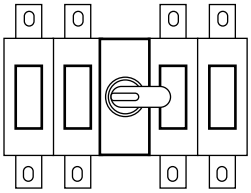

Configuration 22

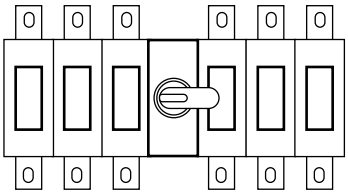

Configuration 33

Technical data

OTDC S1.0-Series IEC and UL



OTDC100...250E/U_

Technical data according to IEC 60947 for switch-disconnectors OTDC100...250E_

Switch size					OTDC100E	OTDC160E	OTDC200E	OTDC250E
Rated insulation voltage U_i	Pollution degree 3			V	1500	1500	1500	1500
Rated impulse withstand voltage				kV	12	12	12	12
Rated thermal current I_{th} [2]	In open air, normal conditions [1]			A	100	160	200	250
	In enclosure 40°C			A	96	154	193	241
	In enclosure 50°C			A	89	142	177	222
	In enclosure 60°C			A	80	128	160	200
...with cable or bar cross section	Cu			mm^2	35	70	95	120
Rated operational current DC-21B, poles in series	1000V	1 circuit	2P (1P+, 1P-)	A	100	160	200	250
		2 circuits	4P (2P+, 2P-)	A	100	160	200	250
		3 circuits	6P (3P+, 3P-)	A	100	160	200	
Rated short-time withstand current, 1000V	R.M.S. -value I_{cw}		1s	kA	5	5	5	5
			0.1s	kA	10	10	10	10
Power loss / pole	At rated current			W	2	4	6	9,5
Terminal bolt size	Metric thread diameter x length			mm	M8x25	M8x25	M8x25	M8x25
Terminal tightening torque	Counter torque required			Nm	15...22	15...22	15...22	15...22
Operating torque	2P/4P/6P			Nm	5...8	5...8	5...8	5...8

[1] Normal conditions defined in IEC 60947-1, section 6.1.
[2] Ambient max. average 24h.

Technical data in accordance to UL98B for photovoltaic disconnect switches OTDC100...200U_
Suitable for use In photovoltaic systems in accordance with article 690 of the NEC.

Switch size					OTDC100U	OTDC200U
UL Listed	Standard				UL98B	UL98B
Rated ambient temperature				°C	-20...+50	-20...+50
Rated current	1000V	1 circuit	2P (1P+, 1P-)	A	100	200
		2 circuits	4P (2P+, 2P-)	A	100	200
		3 circuits	6P (3P+, 3P-)	A	100	200
Short circuit rating	1000V			kA	10	10
Protection type					Circuit breaker	Circuit breaker
Mechanical lug					OZXA200	OZXA200
Wire range	Cu/Al				AWG 4-300MCM	AWG 4-300MCM
Tightening torque				lb-in.	200	200
Technical data according to IEC 60947	See IEC table for type				OTDC160E	OTDC250E

Technical data

OTDC S2.0-Series IEC

Technical data according to IEC 60947 for switch-disconnectors OTDC100G_...250G_

Switch size					A	OTDC100G_	OTDC160G_	OTDC200G_	OTDC250G_
Rated insulation voltage U_i		Pollution degree 3			V	1500	1500	1500	1500
Rated impulse withstand voltage					kV	12	12	12	12
Rated thermal current I_{th} [1]		In open air, normal conditions [2]			A	100	160	200	250
		In enclosure 40°C			A	100	160	200	250
		In enclosure 50°C			A	100	160	200	250
		In enclosure 60°C			A	100	160	200	219
		In enclosure 70°C			A	100	146	169	185
		In enclosure 80°C			A	88	115	133	146
...with cable or bar cross section		Cu			mm^2	35	70	95	120
Rated operational current Ie [3], poles in series	DC-21B	1000V	1 circuit	2P (1P+, 1P-)	A	100	160	200	250
			2 circuits	4P (2P+, 2P-)	A	100	160	200	250
		1500V	1 circuit	2P (1P+, 1P-)	A	100	160	200	250
			2 circuits	4P (2P+, 2P-)	A	100	160	200	250
	DC-PV1	1000V	1 circuit	2P (1P+, 1P-)	A	100	160	200	200
			2 circuits	4P (2P+, 2P-)	A	100	160	200	200
		1500V	1 circuit	2P (1P+, 1P-)	A	100	160	200	200
			2 circuits	4P (2P+, 2P-)	A	100	160	200	200
	DC-PV2	1000V	1 circuit	2P (1P+, 1P-)	A	100	160	200	200
			2 circuits	4P (2P+, 2P-)	A	100	160	200	200
		1500V	1 circuit	2P (1P+, 1P-)	A	100	100	100	100
			2 circuits	4P (2P+, 2P-)	A	100	100	100	100
Rated short-time withstand current, 1500V, 0,1		R.M.S. -value I_{cw}			kA	10	10	10	10
Rated short circuit making capacity, 1500V		Peak value I_{cm}			kA	10	10	10	10
Power loss / pole		At rated current			W	1,0...1,3	3,1...3,5	5,0...5,5	7,7...8,4
Terminal bolt size		Metric thread diameter x length			mm	M8x25	M8x25	M8x25	M8x25
Terminal tightening torque		Counter torque required			Nm	15...22	15...22	15...22	15...22
Mechanical Endurance		Cycles			-	10.000			
Operating altitude without derating					m	≤2000			
Operating torque		2P/4P			Nm	6...9	6...9	6...9	6...9

[1] For more detailed derating, please consult us. Installation condition may have an influence on the derating by increasing the possible rated current. The given deratings are references based on specific test setup.
[2] Normal conditions defined in IEC 60947-1, section 6.1.
[3] For DC-22B utilization category ratings, please consult us.



OTDC100...250_G_

Technical data

OTDC S2.0-Series IEC and UL

Technical data in accordance to UL98B for photovoltaic disconnect switches OTDC100UG_...250UG_
Suitable for use in photovoltaic systems in accordance with article 690 of the NEC.

Switch size					**OTDC100UG_**	**OTDC200UG_**	**OTDC250UG_**
UL Listed	Standard				UL98B	UL98B	UL98B
Rated ambient temperature without derating				°C	-20...+50	-20...+50	-20...+50
Rated current	1000V	1 circuit	2P (1P+,1P-)	A	100	200	250
		2 circuits	4P (2P+,2P-)	A	100	200	250
	1500V	1 circuit	2P (1P+,1P-)	A	100	200	250
		2 circuits	4P (2P+,2P-)	A	100	200	250
Short circuit rating Required protection [2]	1500V			kA	10 Any	10 Any	10 Any
Mechanical lug					OZXA 100	OZXA 200	OZXA 252
Wire range					AWG 14-2/0	AWG 4-300MCM	2 X AWG 14-2/0
Tightening torque				lb-in.	35-50	200	120
Technical data according to IEC 60947	See IEC table for type				OTDC160G_	OTDC250G_	OTDC250G_

[1] For more detailed derating please consult us. Installation condition may have an influence on the derating. The given deratings are references based on specific test setup.
[2] Any suitable PV fuse or PV circuit breaker.



OTDC100...250_G_

Technical data

OTDC S2.0-Series for higher short-circuit currents IEC

Technical data according to IEC 60947 for switch-disconnectors OTDC100G_...250G_-ESS

Switch size						A	OTDC100G_-ESS	OTDC160G_-ESS	OTDC200G_-ESS	OTDC250G_-ESS
Rated insulation voltage U_i		Pollution degree 2				V	1500	1500	1500	1500
Rated impulse withstand voltage						kV	12	12	12	12
Rated thermal current I_{th} [1]		In open air, normal conditions [2]				A	100	160	200	250
		In enclosure 40°C				A	100	160	200	250
		In enclosure 50°C				A	100	160	200	250
		In enclosure 60°C				A	100	160	200	219
		In enclosure 70°C				A	100	146	169	185
		In enclosure 80°C				A	88	115	133	146
...with cable or bar cross section		Cu				mm^2	35	70	95	120
Rated operational current Ie [5], poles in series	DC-21B	1000V	1 circuit	2P (1P+, 1P-)		A	100	160	200	250
			2 circuits	4P (2P+, 2P-)		A	100	160	200	250
		1500V	1 circuit	2P (1P+, 1P-)		A	100	160	200	250
			2 circuits	4P (2P+, 2P-)		A	100	160	200	250
	DC-PV1	1000V	1 circuit	2P (1P+, 1P-)		A	100	160	200	200
			2 circuits	4P (2P+, 2P-)		A	100	160	200	200
		1500V	1 circuit	2P (1P+, 1P-)		A	100	160	200	200
			2 circuits	4P (2P+, 2P-)		A	100	160	200	200
	DC-PV2	1000V	1 circuit	2P (1P+, 1P-)		A	100	160	200	200
			2 circuits	4P (2P+, 2P-)		A	100	160	200	200
		1500V	1 circuit	2P (1P+, 1P-)		A	100	100	100	100
			2 circuits	4P (2P+, 2P-)		A	100	100	100	100
Rated short-time withstand current, 1500V, 0,1		R.M.S. -value I_{cw}				kA	10	10	10	10
Rated short circuit making capacity, 1500V		Peak value I_{cm}				kA	10	10	10	10
Rated conditional short-circuit current Iq		R.M.S. - value Iq				kA	50	50	50	50
Required protection [3]		Max. fuse size				A	100	160	200	250
Power loss/pole		At rated current				W	1,0...1,3	3,1...3,5	5,0...5,5	7,7...8,4
Terminal bolt size		Metric thread diameter x length				mm	M8x25	M8x25	M8x25	M8x25
Terminal tightening torque		Counter torque required				Nm	15...22	15...22	15...22	15...22
Mechanical Endurance		Cycles				-	10.000			
Operating altitude without derating						m	≤2000			
Operating torque		2P				Nm	6...9	6...9	6...9	6...9

[1] For more detailed derating please consult us. Installation condition may have an influence on the derating by increasing the possible rated current. The given deratings are a reference based on specific test setup.
[2] Normal conditions defined in IEC 60947-1, section 6.1.
[3] Please consult us on the fuse coordination table for more information.
[4] For DC-22B utilization category ratings, please consult us.



OTDC100...250_G_

Technical data

OTDC S2.0-Series for higher short-circuit currents IEC and UL

Technical data in accordance to UL98B for photovoltaic disconnect switches OTDC100UG_...250UG_-ESS
Suitable for use in photovoltaic systems in accordance with article 690 of the NEC.

Switch size					OTDC100UG_-ESS	OTDC200UG_-ESS	OTDC250UG_-ESS
UL Listed	Standard				UL98B	UL98B	UL98B
Rated ambient temperature				°C	-20...+50	-20...+50	-20...+50
Rated current [1]	1000V	1 circuit	2P (1P+, 1P-)	A	100	200	250
		2 circuits	4P (2P+, 2P-)	A	100	200	250
	1500V	1 circuit	2P (1P+, 1P-)	A	100	200	250
		2 circuits	4P (2P+, 2P-)	A	100	200	250
Short circuit rating Required protection [2]	1500V		R.M.S. -value	kA	10 Any	10 Any	10 Any
Short circuit rating Required protection [3]	1500V DC Max. fuse size			kA A	50 100	50 200	50 250
Mechanical lug					OZXA 100	OZXA 200	OZXA 252
Wire range					AWG 14-2/0	AWG 4-300MCM	2 X AWG 14-2/0
Tightening torque				lb-in.	35-50	200	120
Technical data according to IEC 60947	See IEC table for type				OTDC160G_	OTDC250G_	OTDC250G_

[1] For more detailed derating please consult us. Installation condition may influence on the derating. The given deratings are references based on specific test setup.
[2] Any suitable PV fuse or PV circuit breaker.
[3] Please consult us on the fuse coordination table for more information



OTDC100...250_G_

Ordering information, IEC and UL

OTDC S1.0-Series 100…250A



OTDC100...250_11

The OTDC S1.0-Series is specially designed for DC applications up to 1000V DC in the current range from 100A up to 250A. The switch has one of the smallest physical footprints and lowest power losses in the market. Handles and shafts are not included.

IEC Ordering information

Voltage [V DC]	Rated operational current [A] DC-21B	Number of Circuits	Circuit [1]	Number of poles	Single package Type [2]	Order code
Front operated, mechanism between the poles						
1000	100	1	2a, 2b	2	OTDC100E11	1SCA125821R1001
1000	160	1	2a, 2b	2	OTDC160E11	1SCA123745R1001
1000	200	1	2a, 2b	2	OTDC200E11	1SCA125626R1001
1000	250	1	2a, 2b	2	OTDC250E11	1SCA125865R1001
1000	100	2	4a, 4c	4	OTDC100E22	1SCA125824R1001
1000	160	2	4a, 4c	4	OTDC160E22	1SCA125844R1001
1000	200	2	4a, 4c	4	OTDC200E22	1SCA125856R1001
1000	250	2	4a, 4c	4	OTDC250E22	1SCA125869R1001
1000	100	3	7a, 7e	6	OTDC100E33	1SCA149066R1001
1000	160	3	7a, 7e	6	OTDC160E33	1SCA149065R1001
1000	200	3	7a, 7e	6	OTDC200E33	1SCA149067R1001

UL Ordering information

Voltage [V DC]	Rated operational current [A] UL98B	IEC60947-3	Number of Circuits	Circuit [1]	Number of poles	Single package Type [2]	Order code
Front operated, mechanism between the poles							
1000	100	100	1	2a, 2b	2	OTDC100U11	1SCA123957R1001
1000	200	200	1	2a, 2b	2	OTDC200U11	1SCA123767R1001
1000	100	100	2	4a, 4c	4	OTDC100U22	1SCA126180R1001
1000	200	200	2	4a, 4c	4	OTDC200U22	1SCA126129R1001
1000	100	100	3	7a, 7e	6	OTDC100U33	1SCA149069R1001
1000	200	200	3	7a, 7e	6	OTDC200U33	1SCA149090R1001

[1] Please see floating circuit in page 36 and grounded circuits in pages 56-57. Single circuit 1a and Double circuit 3 with connection bar kit accessories.
[2] Phase barriers are included in types OTDC100...250_22/33 – installation mandatory..
You can find the accessories starting from page 47 and dimensional drawings starting from page 61.

Ordering information, IEC and UL

OTDC S2.0-Series 100…250A



OTDC100...250_GV11

Robust DC switch-disconnector for up to 1500V DC applications covering 100-250A current range. The new design has a more compact size, higher efficiency and higher performance. The two-pole 1500V DC concept helps manufacturers improve system efficiency, reducing switch power losses up to 75%. The physical footprint is up to 70% smaller than other solutions in the market. The compact size of the new OTDC range makes it possible for manufacturers to reduce the size of enclosures. Handles, shafts or other hardware are not included.

IEC Ordering information

Voltage [V DC]	Rated operational Current [A] DC-21B	DC-PV2	Number of Circuits	Circuit [1]	Number of poles	Single package Type [2]	Order code	Bulk package Type [3]	Order code
Front operated, mechanism between the poles									
1500	100	100	1	2a, 2b	2	OTDC100GV11	1SCA161932R1001	OTDC100GV11/280	1SCA162002R1001
1500	160	100	1	2a, 2b	2	OTDC160GV11	1SCA161933R1001	OTDC160GV11/280	1SCA162004R1001
1500	200	100	1	2a, 2b	2	OTDC200GV11	1SCA161938R1001	OTDC200GV11/280	1SCA162005R1001
1500	250	100	1	2a, 2b	2	OTDC250GV11	1SCA161996R1001	OTDC250GV11/280	1SCA162007R1001
1500	100	100	2	4a, 4c	4	OTDC100GV22	1SCA161976R1001		
1500	160	100	2	4a, 4c	4	OTDC160GV22	1SCA161985R1001		
1500	200	100	2	4a, 4c	4	OTDC200GV22	1SCA161989R1001		
1500	250	100	2	4a, 4c	4	OTDC250GV22	1SCA161939R1001		
Side operated, mechanism at the end of the switch									
1500	100	100	1	2a, 2b	2	OTDC100GV02S	1SCA161974R1001		
1500	160	100	1	2a, 2b	2	OTDC160GV02S	1SCA161982R1001		
1500	200	100	1	2a, 2b	2	OTDC200GV02S	1SCA161986R1001		
1500	250	100	1	2a, 2b	2	OTDC250GV02S	1SCA161995R1001		

UL Ordering information

Voltage [V DC]	Rated operational Current [A] UL98B	IEC60947-3	Number of Circuits	Circuit [1]	Number of poles	Single package Type [2]	Order code	Bulk package Type [3]	Order code
Front operated, mechanism between the poles									
1500	100	160	1	2a, 2b	2	OTDC100UGV11	1SCA161978R1001	OTDC100UGV11/280	1SCA162003R1001
1500	200	250	1	2a, 2b	2	OTDC200UGV11	1SCA161991R1001	OTDC200UGV11/280	1SCA162006R1001
1500	250	250	1	2a, 2b	2	OTDC250UGV11	1SCA161942R1001	OTDC250UGV11/280	1SCA162008R1001
1500	100	160	2	4a, 4c	4	OTDC100UGV22	1SCA161981R1001		
1500	200	250	2	4a, 4c	4	OTDC200UGV22	1SCA161994R1001		
1500	250	250	2	4a, 4c	4	OTDC250UGV22	1SCA162001R1001		
Side operated, mechanism at the end of the switch									
1500	100	160	1	2a, 2b	2	OTDC100UGV02S	1SCA161977R1001		
1500	200	250	1	2a, 2b	2	OTDC200UGV02S	1SCA161990R1001		
1500	250	250	1	2a, 2b	2	OTDC250UGV02S	1SCA161940R1001		

* Please consult us for 1000V DC types.

[1] Please see floating circuit in page 36 and grounded circuits in pages 56-57. Single circuit 1a and Double circuit 3 with connection bar kit accessories.

[2] Phase barriers are included to pole configurations _22/_02 – Installation mandatory.

[3] Bulk package includes 280pcs of switches in FIN-pallet (LxWxH) 1200mm x 1000mm x 1200mm. The bulk package contains only switches and one installation instruction.

You can find the accessories starting from page 47 and dimensional drawings starting from page 61.

Ordering information, IEC and UL

OTDC S2.0-Series 100…250A for higher short-circuit currents



OTDC100...250_GV11-ESS

Robust DC switch-disconnector for up to 1500V DC applications covering 100-250A current range. These new switches have higher short-circuit ratings. Handles and shafts are not included.

IEC Ordering information

Voltage [V DC]	Rated operational current [A] DC-21B	DC-PV2	Number of circuits	Circuit [1]	Number of poles	Single package Type	Order code
Front operated, mechanism between the poles							
1500	100	100	1	2a, 2b	2	OTDC100GV11-ESS	1SCA161975R1001
1500	160	100	1	2a, 2b	2	OTDC160GV11-ESS	1SCA161983R1001
1500	200	100	1	2a, 2b	2	OTDC200GV11-ESS	1SCA161987R1001
1500	250	100	1	2a, 2b	2	OTDC250GV11-ESS	1SCA161997R1001

UL Ordering information

Voltage [V DC]	Rated operational current [A] UL98B	IEC60947-3	Number of circuits	Circuit [1]	Number of poles	Single package Type	Order code
Front operated, mechanism between the poles							
1500	100	160	1	2a, 2b	2	OTDC100UGV11-ESS	1SCA161979R1001
1500	200	250	1	2a, 2b	2	OTDC200UGV11-ESS	1SCA161992R1001
1500	250	250	1	2a, 2b	2	OTDC250UGV11-ESS	1SCA161999R1001

* Please consult us for 1000V DC types.

[1] Please see floating circuit in page 36 and grounded circuits from pages 56-57. Single circuit 1a and Double circuit 3 with connection bar kit accessories.

You can find the accessories starting from page 47 and dimensional drawings starting from page 61.

Ordering information, IEC and UL

OTDC S1.0 and S2.0 circuits

Single circuit 2a, 2b

2-pole, 4-wire, 1-circuit

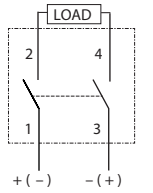

2-pole, 4-wire, 1-circuit
REVERSED SUPPLY

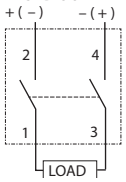

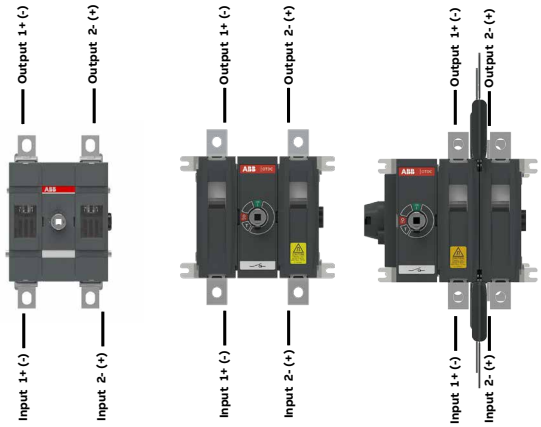

Double circuit 4a, 4c

4-pole, 4-wire, 2-circuit

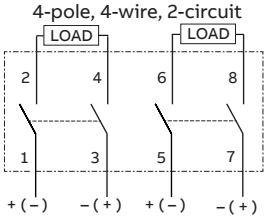

4-pole, 4-wire, 2-circuit
REVERSED SUPPLY

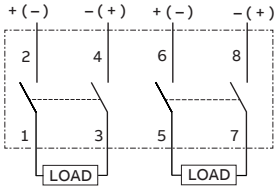



Triple circuit 7a, 7e

6-pole, 12-wire, 3-circuit

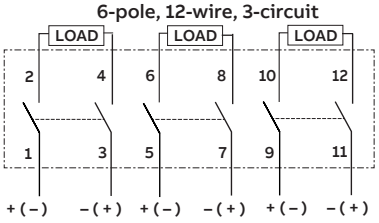

6-pole, 12-wire, 3-circuit
REVERSED SUPPLY

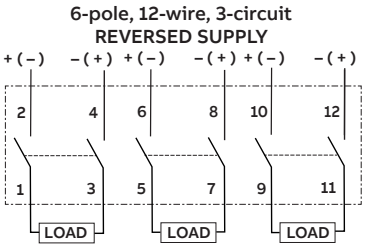



05

OTDC M-Series

05.1. Overview of product range OTDC M

05.2. Technical data

05.3. Ordering information

05.4. OTDC M-Series circuits



Overview of product range OTDC M-Series
Type codes and pole configuration table

Understanding the type code keys below will help you quickly identify the correct product for your needs. The simple naming system allows you to see the products type, Ampere rating, standard classification and number of poles, all in one glance.

Explanation of the types OTDC M-Series from 315A up to 1000A (IEC) and 250A up to 1000A (UL98B)

ABB Brand
DC switch-disconnector

Switch size/Ampere rating

Symbols	
IEC	315A, 400A, 500A, 630A, 800A, 1000A
UL	250A, 320A, 400A, 600A, 800A, 1000A

Voltage

Symbols	
Blank	1000V DC
V	1500V DC

Application

Symbols	
Blank	Rated short-time withstand current 10kA
EES	Rated condition short-circuit current >10kA

OTDC 400 UF V 11 S -ESS

Standard

Symbols	
F	IEC 60947
UF	UL98B and IEC60947

Number of poles

Symbols	
11	Two poles, mechanism between the poles
02	Two poles, mechanism at the end of the switch
22	Four poles, mechanism between the poles
33	Six poles, mechanism between the poles

Operation mode

Symbols	
Blank	Front operation (handle not included)
S	Side operation (handle not included)

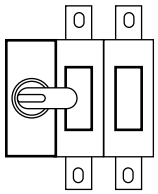

Configuration 02

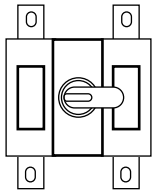

Configuration 11

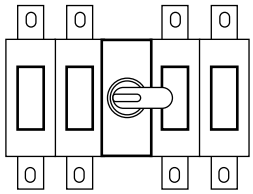

Configuration 22

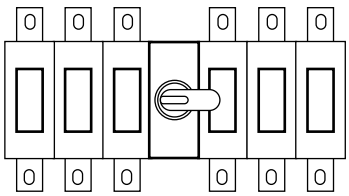

Configuration 33

Technical data

OTDC M-Series IEC

Technical data according to IEC 60947 for switch-disconnectors OTDC315F...1000F

Switch size						OTDC 315F_	OTDC 400F_	OTDC 500F_	OTDC 630F_	OTDC 800F_11	OTDC 800F_22	OTDC 1000F_22
Rated insulation voltage U_i	Pollution degree 3			V	1500	1500	1500	1500	1500	1500	1500
Rated impulse withstand voltage				kV	12	12	12	12	12	12	12
Rated thermal current I_{th} [1]	In open air, normal conditions [2]			A	315	400	500	630	800	800	1000
	In enclosure 40°C			A	315	400	500	630	630	800	1000
	In enclosure 50°C			A	315	400	475	567	630	800	1000
	In enclosure 60°C			A	293	352	415	498	523	664	830
	In enclosure 80°C			A	195	232	275	328	347	440	550
...with cable or bar cross section	Cu			mm^2	185	240	2x150	2x185	2x240	2x241	4x150
Rated operational current Ie, poles in series	DC-21B	1000V	1 circuit	2P (1P+, 1P-)	A	315	400	500	630	800	800 [3]	1000 [3]
			2 circuits	4P (2P+, 2P-)	A	315	400	500	630			
			3 circuits	6P (3P+, 3P-)	A	315	400	500	630			
		1500V	1 circuit	2P (1P+, 1P-)	A	315	400	500	630	800	800 [3]	1000 [3]
			2 circuits	4P (2P+, 2P-)	A	315	400	500	630			
			3 circuits	6P (3P+, 3P-)	A	315	400	500	630			
	DC-PV1	1000V	1 circuit	2P (1P+, 1P-)	A	315	400	500	500	500	800 [3]	1000 [3]
			2 circuits	4P (2P+, 2P-)	A	315	400	500	500			
		1500V	1 circuit	2P (1P+, 1P-)	A	315	400	500	500	500	800 [3]	1000 [3]
			2 circuits	4P (2P+, 2P-)	A	315	400	500	500			
	DC-PV2	1000V	1 circuit	2P (1P+, 1P-)	A	315	400	500	500/630 [3]	500	800 [3]	
			2 circuits	4P (2P+, 2P-)	A	315	400	500	500			
		1500V	1 circuit	2P (1P+, 1P-)	A	315	400	500	500/630 [3]	500	800 [3]	
			2 circuits	4P (2P+, 2P-)	A	315	400	500	500			
	DC-22B	1000V	1 circuit	2P (1P+, 1P-)	A	315	400	400	400	400		
			2 circuits	4P (2P+, 2P-)	A	315	400	400	400			
		1500V	1 circuit	2P (1P+, 1P-)	A	315	400	400	400	400		
			2 circuits	4P (2P+, 2P-)	A	315	400	400	400			
Rated short-time withstand current, 1500V, 1s	R.M.S. -value Icw			kA	10	10	10	10	10	10	10
Rated short circuit making capacity, 1500V	Peak value Icm			kA	10	10	10	10	10	10	10
Power loss/pole	At rated current			W	7-8	12-13	18-20	30-32	48-52	22-24	37-40
Terminal bolt size	Metric thread diameter x length			mm	M10x30	M10x30	M12x40	M12x40	M12x40	M12x40	M12x40
Terminal tightening torque	Counter torque required			Nm	30-44	30-44	50-75	50-75	50-75	50-75	50-75
Mechanical Endurance	Cycles			-	10 000						
Operating altitude without derating				m	≤2000						
Operating torque			2P	Nm	11...19	11…19	11…19	11…19	11...19		
			4P		18...30	18…30	18…30	18…30		18…30	18...30
			6P		18...35	18...35	18...35				

[1] For more detailed derating please consult us. Installation condition may influence on the derating by increasing the possible rated current. The given deratings are references based on specific test setup.
[2] Normal conditions defined in IEC 60947-1, section 6.1.
[3] 4-pole-types with 2-poles in parallel _22 models, OTDCKIT800FS11 is included to the package – installation mandatory.



OTDC315...800F_11



OTDC800...1000F_22

Technical data
OTDC M-Series UL

Technical data in accordance to UL98B for photovoltaic disconnect switches OTDC250U_...1000UF_
Suitable for use in photovoltaic systems in accordance with article 690 of the NEC.

Switch size					**OTDC250UF_**	**OTDC320UF_**	**OTDC400UF_**	**OTDC600UF_**	**OTDC800UF_22**	**OTDC1000UF_22**
UL Listed	Standard				UL98B	UL98B	UL98B	UL98B	UL98B	UL98B
Rated ambient temperature				°C	-20...+50	-20...+50	-20...+50	-20...+50	-20...+50	-20...+50
Rated current [1]	1000V	1 circuit	2P (1P+, 1P-)	A	250	320	400	600	800 [2]	1000 [2]
		2 circuits	4P (2P+, 2P-)	A	250	320	400	600	-	-
	1500V	1 circuit	2P (1P+, 1P-)	A	250	320	400	600	800 [2]	1000 [2]
		2 circuits	4P (2P+, 2P-)	A	250	320	400	600	-	-
Short circuit rating Required protection [3]	1500V			kA	10 Any	10 Any	10 Any	10 Any	10 Any	10 Any
Mechanical lug					OZXA 402	OZXA 402	OZXA 402	OZXA 604	OZXA 804	OZXA 804
Wire range					2x AWG 6-300MCM	2x AWG 6-300MCM	2x AWG 6-300MCM	4x AWG 6-300MCM	4x AWG 2-600MCM	4x AWG 2-600MCM
Tightening torque				lb-in.	275	275	275	275	500	500
Technical data according to IEC 60947	See IEC table for type				OTDC315F_	OTDC400F_	OTDC500F_	OTDC630F_	OTDC800F_22	OTDC1000F_22

[1] For more detailed derating please consult us. Installation condition may influence on the derating. The given deratings are references based on specific test setup.
[2] 4-pole-types with 2-poles in parallel _22 models, OTDCKIT800FS11 is included to the package and installation is mandatory.
[3] Any suitable PV fuse or PV circuit breaker.



OTDC250...600UF_11



OTDC800...1000UF_22

Technical data

OTDC M-Series for higher short-circuit currents IEC

Technical data according to IEC 60947 for switch-disconnectors OTDC315F_...1000F_-ESS

Switch size						OTDC 315F_-ESS	OTDC 400F_-ESS	OTDC 500F_-ESS	OTDC 630F_-ESS	OTDC 800F_22-ESS	OTDC 1000F_22-ESS
Rated insulation voltage U_i			Pollution degree 3		V	1500	1500	1500	1500	1500	1500
Rated impulse withstand voltage					kV	12	12	12	12	12	12
Rated thermal current Ith [1]			In open air, normal conditions [2]		A	315	400	500	630	800	1000
			In enclosure 40°C		A	315	400	500	630	800	1000
			In enclosure 50°C		A	315	400	475	567	800	1000
			In enclosure 60°C		A	293	352	415	498	664	830
			In enclosure 80°C		A	195	232	275	328	440	550
...with cable or bar cross section			Cu		mm^2	185	240	2x150	2x185	2x240	4x150
Rated operational current I_e Poles in series	DC-21B	1000V	1 circuit	2P (1P+, 1P-)	A	315	400	500	630	800 [3]	1000 [3]
		1500V			A	315	400	500	630	800 [3]	1000 [3]
	DC-PV1	1000V			A	315	400	500	500	800 [3]	1000 [3]
		1500V			A	315	400	500	500	800 [3]	1000 [3]
	DC-PV2	1000V			A	315	400	500	500/630 [3]	800 [3]	-
		1500V			A	315	400	500	500/630 [3]	800 [3]	-
	DC-22B	1000V			A	315	400	400	400	-	-
		1500V			A	315	400	400	400	-	-
Rated short-time withstand current I_{cw}, 1500V				1	kA	10	10	10	10	10	10
			R.M.S. -value I_{cw}	0,1	kA	20	20	20	20	63	63
Rated short circuit making capacity I_{cm}, 1500V			Peak value, I_{cm}		kA	20	20	20	20	63	63
Rated conditional short-circuit current I_q, 1500V Required protection [4]			R.M.S. - value I_q		kA	50	50	50	50	50	50
			Max. fuse size		A	315	400	500	630	800	1000
Rated conditional short-circuit current I_q, 1500V [5]			R.M.S. - value I_q, L/R = 5 ms		kA	70	70	70	70	-	-
			Allowed let through peak		kA	29	29	29	29	-	-
			Allowed let through energy I^2t		MA^2s	2,3	2,3	2,3	2,3	-	-
Rated conditional short-circuit current I_q, 1500V [5]			R.M.S. - value I_q, L/R = 0.5 ms		kA	100	100	100	100	100	100
			Allowed let through peak		kA	53	53	53	53	70	70
			Allowed let through energy I^2t		MA^2s	1,1	1,1	1,1	1,1	2,4	2,4
Power loss/pole			At maximum rated current		W	7-8	12-13	18-20	30-32	22-24	37-40
Terminal bolt size			Metric thread diameter x length mm			M10x30	M10x30	M12x40	M12x40	M12x40	M12x40
Terminal tightening torque			Counter torque required		Nm	30-44	30-44	50-75	50-75	50-75	50-75
Mechanical Endurance			Cycles		-	10000					
Operating altitude without derating					m	≤ 2000					
Operating torque			2P		Nm	11…19	11…19	11…19	11…19		
			4P			18…30	18…30	18…30	18…30	18…30	18…30
			6P			18...35	18...35	18...35			

[1] For more detailed derating please consult us. Installation condition may have an influence on the derating by increasing the possible rated current. The given deratings are references based on specific test setup.
[2] Normal conditions defined in IEC 60947-1, section 6.1.
[3] 4-pole-types with 2-poles in parallel _22 models, OTDCKIT800FS11 is included in the package and installation is mandatory.
[4] Please consult us on the fuse coordination table for more information
[5] Any fuse, which does not exceed stated values, can be used.



OTDC315...630F_11-ESS



OTDC800...1000F_22-ESS

Technical data

OTDC M-Series for higher short-circuit currents UL

Technical data in accordance to UL98B for photovoltaic disconnect switches OTDC250_...1000UF_ -ESS
Suitable for use in photovoltaic systems in accordance with article 690 of the NEC.

Switch size				OTDC 250UF_-ESS	OTDC 320UF_-ESS	OTDC 400UF_-ESS	OTDC 600UF_-ESS	OTDC 800UF_22-ESS	OTDC 1000UF_22-ESS
UL listed	Standard			UL98B	UL98B	UL98B	UL98B	UL98B	UL98B
Rated ambient temperature without de-rating [1]			°C	-20…+50 °C	-20…+50 °C	-20…+50 °C	-20…+50 °C	-20…+50 °C	-20…+50 °C
Rated current	1000V	1 circuit 2P	A	250	320	400	600	800 [3]	1000 [3]
	1500V	1 circuit 2P	A	250	320	400	600	800 [3]	1000 [3]
Short-circuit rating	1500V	R.M.S. -value	kA	10	10	10	10	40	40
Required protection				Any [4]	Any [4]	Any [4]	Any [4]	Any [4]	Any [4]
Short-circuit rating	1500V		kA	50	50	50	50	50	50
Required protection [2]	Max. fuse size		A	250	320	400	600	800	1000
Mechanical lug				OZXA 402	OZXA 402	OZXA 402	OZXA 402	OZXA 804	OZXA 804
Wire range	MCM			2x AWG 6-300MCM	2x AWG 6-300MCM	2x AWG 6-300MCM	2x AWG 6-300MCM	4x AWG 2-600MCM	4x AWG 2-600MCM
Terminal tightening torque			lb-in.	275	275	275	275	500	500
Technical data according to IEC 60947	See IEC table for type			OTDC 315F_-ESS	OTDC 400F_-ESS	OTDC 500F_-ESS	OTDC 630F_-ESS	OTDC 800F_22-ESS	OTDC 1000F_22-ESS

[1] For more detailed derating please consult us. Installation condition may have an influence on the derating. The given deratings are references based on specific test setup.
[2] Please consult us on the fuse coordination table for more information.
[3] 4-pole-types with 2-poles in parallel _22 models, OTDCKIT800FS11 is included in the package and installation is mandatory.
[4] Any suitable PV fuse or PV circuit breaker.



OTDC250...400UF_11-ESS



OTDC800...1000UF_22-ESS

Ordering information, IEC

OTDC M-Series 315…1000A



OTDC315_800_F_11

Robust DC switch-disconnector for up to 1500V DC applications. The new design has a more compact size, higher efficiency and higher performance. The two-pole 1500V DC design that reduces switch power losses up to 50%. The physical footprint is up to 80% smaller than other solutions in the market. Handles and shafts are not included.

Voltage [V DC]	Rated operational current [A] DC-21B	DC-PV2	Number of circuits	Circuit [1]	Number of poles	Single package Type [2]	Order code
Front operated, mechanism between the poles							
1000	315	315	1	2a, 2b	2	OTDC315F11	1SCA158172R1001
1000	400	400	1	2a, 2b	2	OTDC400F11	1SCA158196R1001
1000	500	500	1	2a, 2b	2	OTDC500F11	1SCA158220R1001
1000	630	500	1	2a, 2b	2	OTDC630F11	1SCA158244R1001
1000	800	500	1	2a, 2b	2	OTDC800F11	1SCA158853R1001
1000	630	630	1	6c, 6g	4	OTDC630F22-PV2	1SCA161682R1001
1000	800	800	1	6c, 6g	4	OTDC800F22-PV2	1SCA161684R1001
1000	800	-	1	6c, 6g	4	OTDC800F22	1SCA160619R1001
1000	1000	-	1	6c, 6g	4	OTDC1000F22	1SCA161286R1001
1000	315	315	2	4a, 4c	4	OTDC315F22	1SCA158294R1001
1000	400	400	2	4a, 4c	4	OTDC400F22	1SCA158298R1001
1000	500	500	2	4a, 4c	4	OTDC500F22	1SCA158302R1001
1000	630	500	2	4a, 4c	4	OTDC630F22	1SCA158306R1001
1000	315	-	3	7a, 7e	6	OTDC315F33	1SCA158286R1001
1000	400	-	3	7a, 7e	6	OTDC400F33	1SCA158287R1001
1000	500	-	3	7a, 7e	6	OTDC500F33	1SCA158288R1001
1500	315	315	1	2a, 2b	2	OTDC315FV11	1SCA158178R1001
1500	400	400	1	2a, 2b	2	OTDC400FV11	1SCA158202R1001
1500	500	500	1	2a, 2b	2	OTDC500FV11	1SCA158226R1001
1500	630	500	1	2a, 2b	2	OTDC630FV11	1SCA158250R1001
1500	800	500	1	2a, 2b	2	OTDC800FV11	1SCA158856R1001
1500	630	630	1	6c, 6g	4	OTDC630FV22-PV2	1SCA161683R1001
1500	800	800	1	6c, 6g	4	OTDC800FV22-PV2	1SCA161685R1001
1500	800	-	1	6c, 6g	4	OTDC800FV22	1SCA161280R1001
1500	1000	-	1	6c, 6g	4	OTDC1000FV22	1SCA161288R1001
1500	315	315	2	4a, 4c	4	OTDC315FV22	1SCA158295R1001
1500	400	400	2	4a, 4c	4	OTDC400FV22	1SCA158299R1001
1500	500	500	2	4a, 4c	4	OTDC500FV22	1SCA158303R1001
1500	630	500	2	4a, 4c	4	OTDC630FV22	1SCA158307R1001
1500	315	-	3	7a, 7e	6	OTDC315FV33	1SCA158844R1001
1500	400	-	3	7a, 7e	6	OTDC400FV33	1SCA158847R1001
1500	500	-	3	7a, 7e	6	OTDC500FV33	1SCA158850R1001
Side operated, mechanism at the end of the switch							
1000	315	315	1	2a, 2b	2	OTDC315F02S	1SCA160644R1001
1000	400	400	1	2a, 2b	2	OTDC400F02S	1SCA161230R1001
1000	500	500	1	2a, 2b	2	OTDC500F02S	1SCA161235R1001
1000	630	500	1	2a, 2b	2	OTDC630F02S	1SCA161266R1001
1500	315	315	1	2a, 2b	2	OTDC315FV02S	1SCA161226R1001
1500	400	400	1	2a, 2b	2	OTDC400FV02S	1SCA161232R1001
1500	500	500	1	2a, 2b	2	OTDC500FV02S	1SCA161237R1001
1500	630	500	1	2a, 2b	2	OTDC630FV02S	1SCA161268R1001

[1] Circuit connection 6c, 6g – connection bar kit OTDCKIT800FS11 included with the package – installation mandatory.
Please see floating circuit in page 46 and the grounded circuits in pages 56-57. Single circuit 1a and Double circuit 3 with connection bar kit accessories.
[2] Phase barriers are included to pole configurations _22/_33/_02 – installation mandatory. You can find the accessories starting from page 47 and dimensional drawings starting from page 61.

Ordering information, UL

OTDC M-Series 250…1000A



OTDC 250...600UF_11

Robust DC switch-disconnector for up to 1500V DC applications. The new design has a more compact size, higher efficiency and performance. The two-pole 1500V DC design that reduces switch power losses up to 50%. The physical footprint is up to 80% smaller than other solutions in the market. Handles and shafts are not included.

Voltage [V DC]	Rated operational current [A] UL98B	IEC60947-3	Number of circuits	Circuit [1]	Number of poles	Single package Type [2]	Order code
Front operated, mechanism between the poles							
1000	250	315	1	2a, 2b	2	OTDC250UF11	1SCA158160R1001
1000	320	400	1	2a, 2b	2	OTDC320UF11	1SCA158184R1001
1000	400	500	1	2a, 2b	2	OTDC400UF11	1SCA158209R1001
1000	600	630	1	2a, 2b	2	OTDC600UF11	1SCA158233R1001
1000	800	800	1	6c, 6g	4	OTDC800UF22	1SCA161282R1001
1000	1000	1000	1	6c, 6g	4	OTDC1000UF22	1SCA161290R1001
1000	250	315	2	4a, 4c	4	OTDC250UF22	1SCA158292R1001
1000	320	400	2	4a, 4c	4	OTDC320UF22	1SCA158296R1001
1000	400	500	2	4a, 4c	4	OTDC400UF22	1SCA158300R1001
1000	600	630	2	4a, 4c	4	OTDC600UF22	1SCA158304R1001
1500	250	315	1	2a, 2b	2	OTDC250UFV11	1SCA158166R1001
1500	320	400	1	2a, 2b	2	OTDC320UFV11	1SCA158190R1001
1500	400	500	1	2a, 2b	2	OTDC400UFV11	1SCA158215R1001
1500	600	630	1	2a, 2b	2	OTDC600UFV11	1SCA158239R1001
1500	800	800	1	6c, 6g	4	OTDC800UFV22	1SCA161284R1001
1500	1000	1000	1	6c, 6g	4	OTDC1000UFV22	1SCA161292R1001
1500	250	315	2	4a, 4c	4	OTDC250UFV22	1SCA158293R1001
1500	320	400	2	4a, 4c	4	OTDC320UFV22	1SCA158297R1001
1500	400	500	2	4a, 4c	4	OTDC400UFV22	1SCA158301R1001
1500	600	630	2	4a, 4c	4	OTDC600UFV22	1SCA158305R1001
Side operated, mechanism at the end of the switch							
1000	250	315	1	2a, 2b	2	OTDC250UF02S	1SCA161224R1001
1000	320	400	1	2a, 2b	2	OTDC320UF02S	1SCA161228R1001
1000	400	500	1	2a, 2b	2	OTDC400UF02S	1SCA161234R1001
1000	600	630	1	2a, 2b	2	OTDC600UF02S	1SCA161258R1001
1500	250	315	1	2a, 2b	2	OTDC250UFV02S	1SCA161243R1001
1500	320	400	1	2a, 2b	2	OTDC320UFV02S	1SCA161249R1001
1500	400	500	1	2a, 2b	2	OTDC400UFV02S	1SCA161256R1001
1500	600	630	1	2a, 2b	2	OTDC600UFV02S	1SCA161264R1001

[1] Circuit connection 6c, 6g – connection bar kit OTDCKIT800FS11 included with the package – installation mandatory.
Please see floating circuit in page 46 and the grounded circuits in pages 56-57. Single circuit 1a and Double circuit 3 with connection bar kit accessories.
[2] Phase barriers are included to pole configurations _22/_02 – installation mandatory.
You can find the accessories starting from page 47 and dimensional drawings starting from page 61.

Ordering information, IEC and UL

OTDC M-Series 250…1000A for higher short-circuit current



OTDC315_630_F_11-ESS

Robust DC switch-disconnector for up to 1500V DC applications covering 315-1000A (IEC) and 250-1000A (UL) current range. The new design offers higher short-circuit ratings for the OTDC switches up to 100kA. Handles and shafts are not included.

IEC Ordering information

Voltage [V DC]	Rated operational current [A] DC-21B	DC-PV2	Number of circuits	Circuit [1]	Number of poles	Single package Type	Order code
Front operated, mechanism between the poles							
1000	315	315	1	2a, 2b	2	OTDC315F11-ESS	1SCA158173R1001
1000	400	400	1	2a, 2b	2	OTDC400F11-ESS	1SCA158197R1001
1000	500	500	1	2a, 2b	2	OTDC500F11-ESS	1SCA158221R1001
1000	630	500	1	2a, 2b	2	OTDC630F11-ESS	1SCA158245R1001
1000	800	-	1	6c, 6g	4	OTDC800F22-ESS	1SCA161279R1001
1000	1000	-	1	6c, 6g	4	OTDC1000F22-ESS	1SCA161287R1001
1500	315	315	1	2a, 2b	2	OTDC315FV11-ESS	1SCA158179R1001
1500	400	400	1	2a, 2b	2	OTDC400FV11-ESS	1SCA158203R1001
1500	500	500	1	2a, 2b	2	OTDC500FV11-ESS	1SCA158227R1001
1500	630	500	1	2a, 2b	2	OTDC630FV11-ESS	1SCA158251R1001
1500	800	-	1	6c, 6g	4	OTDC800FV22-ESS	1SCA161281R1001
1500	1000	-	1	6c, 6g	4	OTDC1000FV22-ESS	1SCA161289R1001

UL Ordering information

Voltage [V DC]	Rated operational current [A] UL98B	IEC60947-3	Number of circuits	Circuit [1]	Number of poles	Single package Type	Order code
Front operated, mechanism between the poles							
1000	250	315	1	2a, 2b	2	OTDC250UF11-ESS	1SCA158161R1001
1000	320	400	1	2a, 2b	2	OTDC320UF11-ESS	1SCA158185R1001
1000	400	500	1	2a, 2b	2	OTDC400UF11-ESS	1SCA158210R1001
1000	600	630	1	2a, 2b	2	OTDC600UF11-ESS	1SCA158234R1001
1000	800	800	1	6c, 6g	4	OTDC800UF22-ESS	1SCA161283R1001
1000	1000	1000	1	6c, 6g	4	OTDC1000UF22-ESS	1SCA161291R1001
1500	250	315	1	2a, 2b	2	OTDC250UFV11-ESS	1SCA158167R1001
1500	320	400	1	2a, 2b	2	OTDC320UFV11-ESS	1SCA158191R1001
1500	400	500	1	2a, 2b	2	OTDC400UFV11-ESS	1SCA158216R1001
1500	600	630	1	2a, 2b	2	OTDC600UFV11-ESS	1SCA158240R1001
1500	800	800	1	6c, 6g	4	OTDC800UFV22-ESS	1SCA161285R1001
1500	1000	1000	1	6c, 6g	4	OTDC1000UFV22-ESS	1SCA161293R1001

[1] Circuit connection 6c, 6g – connection bar kit OTDCKIT800FS11 included with the package – installation mandatory.
Please see floating circuit in page 46 and the grounded circuits in pages 56-57. Single circuit 1a and Double circuit 3 with connection bar kit accessories.
You can find the accessories starting from page 47 and dimensional drawings starting from page 61.

Ordering information, IEC and UL

OTDC M Circuits IEC and UL

Single circuit 2a, 2b

2-pole, 4-wire, 1-circuit

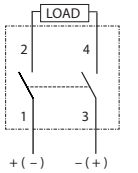

2-pole, 4-wire, 1-circuit
REVERSED SUPPLY

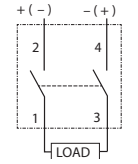





Single circuit 6c, 6g

4-pole, 4-wire
1-circuit
SUPPLY

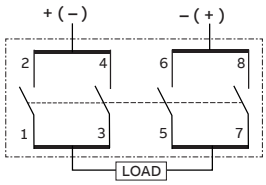

4-pole, 4-wire
1-circuit
REVERSED SUPPLY

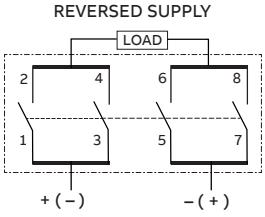

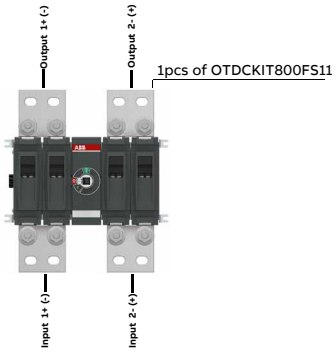

1pcs of OTDCKIT800FS11

Double circuit 4a, 4c

4-pole, 4-wire, 2-circuit

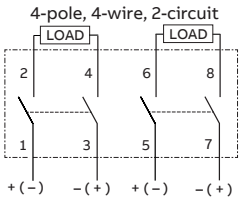

4-pole, 4-wire, 2-circuit
REVERSED SUPPLY

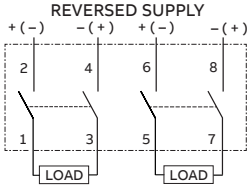



Triple circuit 7a, 7e

6-pole, 12-wire, 3-circuit

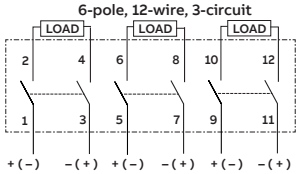

6-pole, 12-wire, 3-circuit
REVERSED SUPPLY

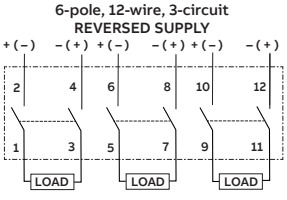

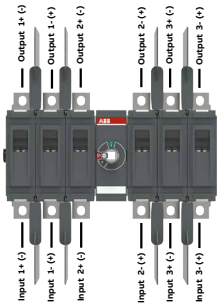

06

OT(M)_-135 -Series

06.1. Overview of product range OT(M)_-135

06.2. Technical data

06.3. Ordering information

06.4. OT(M)_-135 -Series circuits

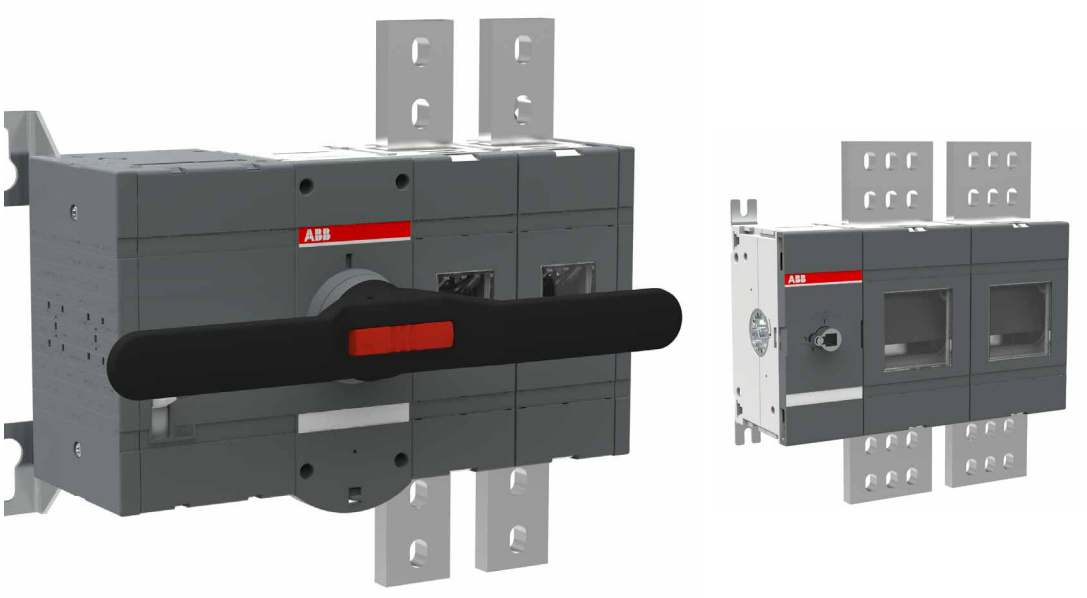

Technical data

Disconnector ratings, IEC

OT(M)1600_-135

	Disconnector types		OT1600E02-135 OTM1600E2M230V-135	OT1600E04-135, OT1600E22-135 OTM1600E4M230V-135	OT1600E04-135	OT1600E22-135
	Number of poles		2	4	4	4
	Number of circuits		1	2	1	1
	Connection type		1	2	3	3
	DC-20B rating, 1500 V	A	1600	1600	2500	2500
	AC-20B rating, 1000 V	A	1600	1600	2500	2500
Rated short-time withstand current, Icw 0.3 s	Support distance 150 mm (with busbars)	kA	50	50	65	65
	Support distance 400 mm (with cables)	kA	36	36	50	50
Max. Let-through Peak Current when protected with Fuses or Circuit Breaker	Support distance 150 mm (with busbars)	kA	110	110 (*120)	140	176
	Support distance 400 mm (with cables)	kA	76	76	105	105
Max. Let-through Energy when protected with Fuses or Circuit Breaker	Support distance 150 mm (with busbars)	MA²s	88	88 (*154)	210	339
	Support distance 400 mm (with cables)	MA²s	43	43	115	115

*) Busbars supported on both sides of the switch contact terminals

OT(M)2500_-135

	Disconnector types		OT2500E02-135 OTM2500E2M230V-135	OT2500E04-135, OT2500E22-135 OTM2500E4M230V-135	OT2500E04-135, OT2500E22-135 OTM2500E4M230V-135
	Number of poles		2	4	4
	Number of circuits		1	2	1
	Connection type		1	2	3
	DC-20B rating, 1500 V	A	2500	2500	4000
	AC-20B rating, 1000 V	A	2500	2500	4000
Rated short-time withstand current, Icw 0.3 s	Support distance 180 mm (with busbars)	kA	80	80	100
Max. Let-through Peak Current when protected with Fuses or Circuit Breaker	Support distance 180 mm (with busbars)	kA	176	176	220
Max. Let-through Energy when protected with Fuses or Circuit Breaker	Support distance 180 mm (with busbars)	MA²s	363	363	616

Busbar support distances

OT(M)1600E_-135

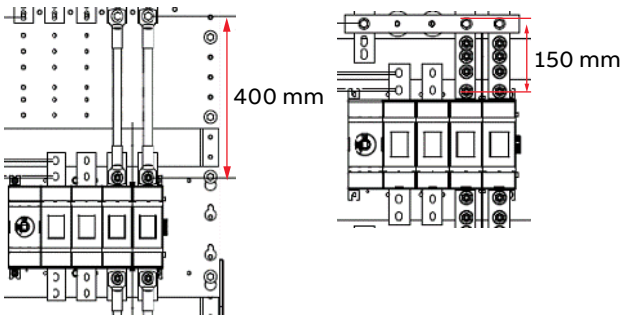

OT(M)2500E_-135

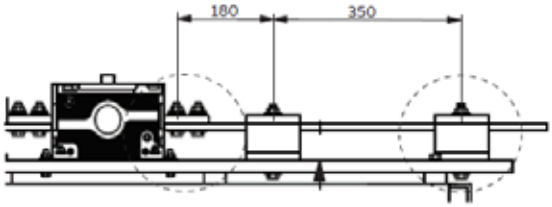

Ordering information, IEC

OT(M)_-135 -Series 1600…4000A



OT1600E02-135

ABB offers manual and remote operated disconnectors suitable for diverse DC-20 applications such as energy storage systems (ESS), large disconnectors for inverters onboard marine vehicles and in photovoltaic installations.

Voltage [V DC]	Rated operational current [A] DC-20B	Number of circuits	Circuit [1]	Number of poles	Single package Type	Order code
Manual operated without handle and shaft						
1500	1600	1	1	2	OT1600E02-135	1SCA159244R1001
1500	1600	2	2	4	OT1600E04-135	1SCA159250R1001
1500	2500	1	3	4	OT1600E04-135	1SCA159250R1001
1500	1600	2	2	4	OT1600E22-135	1SCA159247R1001
1500	2500	1	3	4	OT1600E22-135	1SCA159247R1001
1500	2500	1	1	2	OT2500E02-135	1SCA160392R1001
1500	2500	2	2	4	OT2500E04-135	1SCA160395R1001
1500	4000	1	3	4	OT2500E04-135	1SCA160395R1001
1500	2500	2	2	4	OT2500E22-135	1SCA160398R1001
1500	4000	1	3	4	OT2500E22-135	1SCA160398R1001
Manual operated with direct mounted handle						
1500	1600	1	1	2	OT1600E02K-135	1SCA159245R1001
1500	1600	2	2	4	OT1600E04K-135	1SCA159251R1001
1500	2500	1	3	4	OT1600E04K-135	1SCA159251R1001
1500	1600	2	2	4	OT1600E22K-135	1SCA159248R1001
1500	2500	1	3	4	OT1600E22K-135	1SCA159248R1001
1500	2500	1	1	2	OT2500E02K-135	1SCA160393R1001
1500	2500	2	2	4	OT2500E04K-135	1SCA160396R1001
1500	4000	1	3	4	OT2500E04K-135	1SCA160396R1001
1500	2500	2	2	4	OT2500E22K-135	1SCA160399R1001
1500	4000	1	3	4	OT2500E22K-135	1SCA160399R1001
Motor operated, mechanism at the end of the switch						
1500	1600	1	1	2	OTM1600E2M230V-135	1SCA162142R1001
1500	1600	2	2	4	OTM1600E4M230V-135	1SCA162702R1001
1500	2500	1	1	2	OTM2500E2M230V-135	1SCA162703R1001
1500	2500	2	2	4	OTM2500E4M230V-135	1SCA162704R1001
1500	4000	3	3	4	OTM2500E4M230V-135	1SCA162704R1001

[1] Circuit connection 3 – connection bar kit OTKIT2500B11 available as separate accessory – installation mandatory.
Please see circuit connections in page 53.
You can find the accessories starting from page 57 and dimensional drawings starting from page 82.

Ordering information, IEC

OT(M)_-135 Circuits

Single Circuit
Connection type 1
OT1600...2500E02-135
OTM1600...2500E2M230V-135

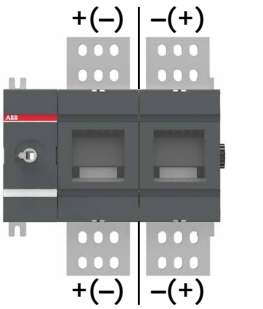

Double Circuit
Connection type 2
OT1600...2500E04-135
OT1600...2500E22-135
OTM1600...2500E4M230V-135

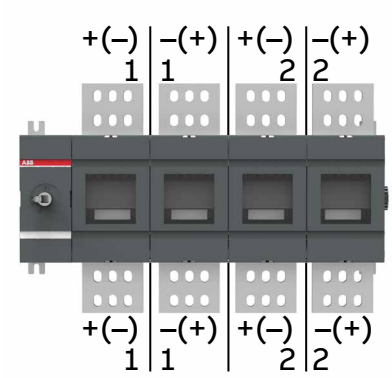

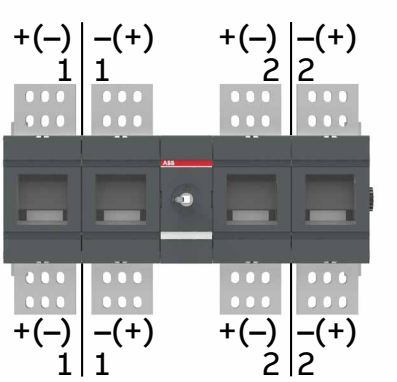

Single Circuit
Connection type 3
OT1600...2500E04-135
OT1600...2500E22-135
OTM1600...2500E4M230V-135

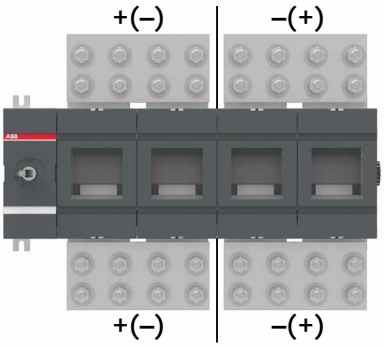

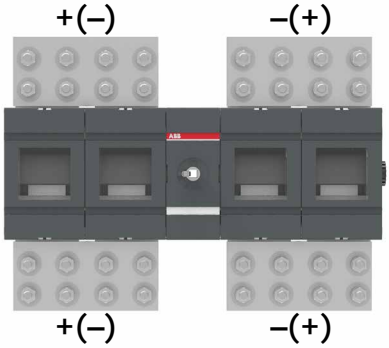

07

Accessories

07.1. DC switch-disconnectors accessory guide for XS-Series

07.2. DC switch-disconnectors accessory guide for S- and M-Series

07.3. Ordering information, accessories

DC switch-disconnectors accessory guide
XS-Series

1. Switch-disconnector
2. Shaft
3. Selector handle or knob handle
4. Legend plate

Please note that not all the listed accessories are automatically included in your order. See the next page for recommendations.



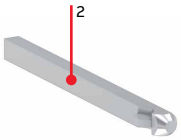



—
Base or DIN-rail mounted

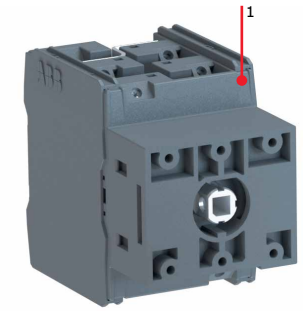

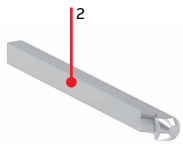





—
Door mounted

—
NOTE: The information in this image applies to both IEC and UL versions of the depicted product.

DC switch-disconnectors accessory guide
S- and M-Series

1. Switch-disconnector
2. Shaft
3. Pistol handle
4. Direct mount handle
5. Phase barrier
6. Connection bar
7. Shroud
8. Auxiliary contact
9. Mechanical lug
10. Mechanical & Electrical interlock

Please note that not all the listed accessories are automatically included in your order. See the next page for recommendations.

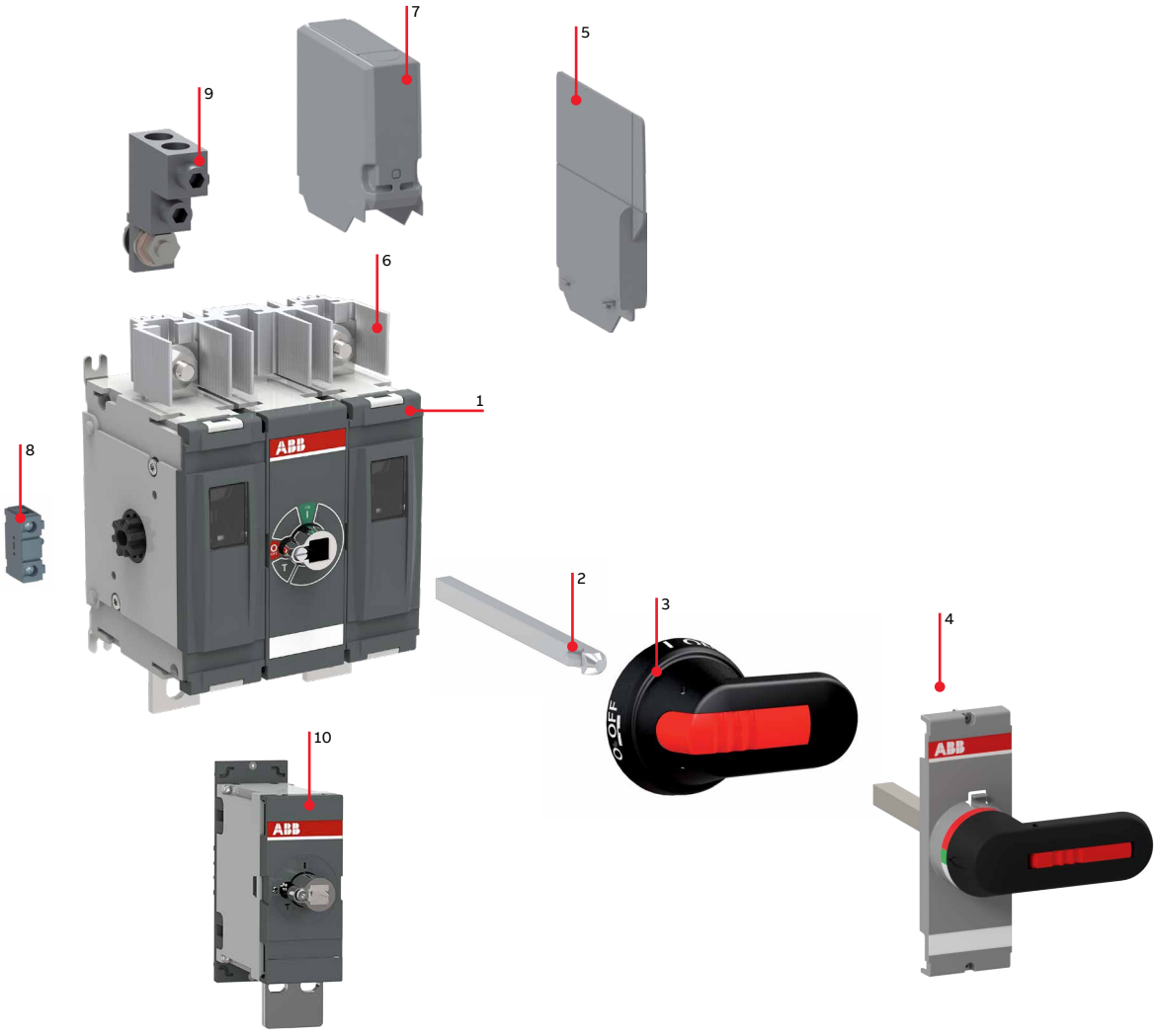

Ordering information for accessories IEC and UL

Handle knobs



OHBS1



OHRS2



OHRS3

Handle knobs for base and DIN rail mounted switches

Mounting directly to the switch, no shaft needed, for base and DIN-rail mounted switches. Padlockable with one padlock with bail diameter 5mm, see the table below. OTDC16...32F_ types already include knob handles in the delivery. For OTDC16...32U_ types, knob handles need to be ordered separately.

Color	Handle length [mm]	Type	Order code
Suitable for switches OTDC16...32_			
Black	31	OHBS1	1SCA109087R1001
Black	31	OHBS1/1	1SCA109088R1001
Red	31	OHRS1	1SCA109095R1001
Red	31	OHRS1/1	1SCA109096R1001
Black	40	OHBS2	1SCA109089R1001
Black	40	OHBS2/1	1SCA109090R1001
Red	40	OHRS2	1SCA108598R1001
Red	40	OHRS2/1	1SCA108599R1001
Black	39	OHBS3	1SCA108320R1001
Black	39	OHBS3/1	1SCA108319R1001
Red	39	OHRS3	1SCA108667R1001
Red	39	OHRS3/1	1SCA108688R1001

Special information for handle knobs

Handle type	Padlockable	Shaft through the handle	45mm cut-out enable*)
OHBS1_, OHRS1_	No	No	Yes
OHBS2_, OHRS2_	Yes	No	Yes
OHBS3_, OHRS3_	No	No	Yes

*) In I-position, the handle shall remain within the cut-out height.

Ordering information for accessories IEC and UL

Selector handles and shafts



OHBS3PH



OHBS2PJ



OHYS3RH



OHYS2RJ



OHBS3



OHBS2



OXS6X_

Selector handles, for door mounted OTDC16...32_T
Indication I-O and ON-OFF. No separate shaft needed.

Color	Padlocking	Degree of protection	Type	Order code
Snap-on mounting, door drilling 22.5mm, for OTDC16...32_T				
Black	No padlocking	IP54, NEMA 1	OHBS1PH	1SCA105211R1001
Red-Yellow	No padlocking	IP54, NEMA 1	OHYS1PH	1SCA105294R1001
Black	Yes with 1 padlock	IP54, NEMA 1	OHBS3PH	1SCA105236R1001
Red-Yellow	Yes with 1 padlock	IP54, NEMA 1	OHYS3PH	1SCA105327R1001
Black	Yes with max.3 padlocks	IP65, NEMA 1, 3R, 12	OHBS2PJ	1SCA105231R1001
Red-Yellow	Yes with max.3 padlocks	IP65, NEMA 1, 3R, 12	OHYS2PJ	1SCA105322R1001
Screw mounting, hole distance 36mm, for OTDC16...32_T				
Black	No padlocking	IP54, NEMA 1	OHBS1RH	1SCA105212R1001
Red-Yellow	No padlocking	IP54, NEMA 1	OHYS1RH	1SCA105295R1001
Black	Yes with 1 padlock	IP54, NEMA 1	OHBS3RH	1SCA105237R1001
Red-Yellow	Yes with 1 padlock	IP54, NEMA 1	OHYS3RH	1SCA105328R1001
Black	Yes with max.3 padlocks	IP65 *), NEMA 1, 3R, 12	OHBS2RJ	1SCA105232R1001
Red-Yellow	Yes with max.3 padlocks	IP65 *), NEMA 1, 3R, 12	OHYS2RJ	1SCA105323R1001

*) hole distance 36/48mm.

Selector handles for base and DIN-rail mounted OTDC16...32_
Indication I-O and ON-OFF, for shaft diameter 6mm, door drilling 22.5mm. Shafts are not included

Color	Padlocking and door interlock	Degree of Protection	Type	Order code
Black	No padlocking	IP54, NEMA 1	OHBS1AH	1SCA102680R1001
Black	No padlocking, door interlocking in ON-position	IP54, NEMA 1	OHBS1AH1	1SCA105210R1001
Black	With 1 padlock (bail diameter 5...6.3 mm)	IP54, NEMA 1	OHBS3AH	1SCA105234R1001
Black	With 1 padlock (bail diameter 5...6.3 mm), door interlocking in ON-position	IP54, NEMA 1	OHBS3AH1	1SCA105235R1001
Black	With max.3 padlocks (bail diameter 5...8mm), door interlocking in ON-position, defetable	IP65, NEMA 1, 3R, 12	OHBS2AJ	1SCA105213R1001
Black	With max.3 padlocks (bail diameter 5...8mm), door interlocking in ON-position	IP65, NEMA 1, 3R, 12	OHBS2AJ1	1SCA105215R1001
Selector handle with metal hasp				
Black	With max.3 padlocks (bail diameter 5...8mm), door interlocking in ON-position, defetable	IP65, NEMA 1, 3R, 12	OHBS2AJEH	1SCA108230R1001
Black	With max.3 padlocks (bail diameter 5...8mm), door interlocking in ON-position, non-defetable	IP65, NEMA 1, 3R, 12	OHBS2AJ1EH	1SCA105217R1001

Door interlocking in ON-position prevents the door from opening when the handle is in ON-position. This can be defeated. in IP65 types to allow authorized personnel access for inspection. The padlocked handle is not defeatable.

Shafts for selector handles

Shaft length [mm]	H [mm]	Type	Order code
Suitable for switches OTDC16...32_ shaft diameter 6 mm			
85	See dimension drawings	OXS6X85	1SCA101647R1001
105		OXS6X105	1SCA108043R1001
120		OXS6X120	1SCA101654R1001
130		OXS6X130	1SCA101655R1001
160		OXS6X160	1SCA101656R1001
180		OXS6X180	1SCA101659R1001
250		OXS6X250	1SCA101660R1001

Ordering information for accessories IEC and UL

Handles



OTDV200GK



OTDV400FK1



OHB_

Direct Mount Handles for front operated OTDC Switch-disconnectors
Indication Test-OFF-ON/Test-O-I. Padlockable with three padlocks in OFF-position. Includes shaft and mechanism cover.

Color	Handle length [mm]	Suitable for switches	Type	Order code
Black	65	OTDC S1.0 - OTDC100…250E_, OTDC100…200U_	OTDV250EK	1SCA127390R1001
Red-Yellow			OTDVY250EK	1SCA127391R1001
Black	65	OTDC S2.0 - OTDC100…250G_, OTDC100…250UG_	OTDV200GK	1SCA161864R1001
Black	95	OTDC M - OTDC315…1000F_, OTDC250…1000UF_ *)	OTDV400FK1	1SCA157315R1001
Black	145		OTDV400FK2	1SCA157316R1001

*) Recommend length: 95mm for 2-pole configuration, 145mm for 4- and 6-pole configurations.

Pistol handles OH_ handles for front operation: IP 65, NEMA 1,3R, 12
Padlockable with three padlocks in OFF-position, door interlock in ON-position. Screw fixing from the back side of the handle ensures double insulation.

Color	Handle length [mm]	Shaft diameter	Suitable for switches	Type	Order code
Indication in types OHB and OHY: I-0, ON-OFF, in types OHG: I-0					
Black	65	6	OTDC S1.0 - OTDC100…250E_, OTDC100…245U_ OTDC S2.0 - OTDC100…250G_, OTDC100…250UG_	OHB65J6	1SCA022380R9660
Red-Yellow	65	6		OHY65J6	1SCA022380R9820
Grey	65	6		OHG65J6	1SCA022380R9740
Black	95	12	OTDC M2.0 - OTDC315…1000F_, OTDC250…1000UF_	OHB95J12	1SCA022381R0830
Red-Yellow	95	12		OHY95J12	1SCA022381R1050
Grey	95	12		OHG95J12	1SCA022381R0910
Black	125	12		OHB125J12	1SCA022381R1560
Yellow-red	125	12		OHY125J12	1SCA022381R1720
Grey	125	12		OHG125J12	1SCA022381R1640
Black	145	12		OHB145J12	1SCA022381R2110
Yellow-red	145	12		OHY145J12	1SCA022381R2370
Grey	145	12		OHG145J12	1SCA022381R2290
Black	274	12	OT1600...2500E_-135	OHB274J12	1SCA115920R1001
Indication: Test-OFF-ON/Test-0-I					
Black	65	6	OTDC S1.0 - OTDC100…250E_, OTDC100…245U_ OTDC S2.0 - OTDC100…250G_, OTDC100…250UG_	OHB65J6T	1SCA022399R8110
Black	95	12	OTDC M2.0 - OTDC315…1000F_, OTDC250…1000UF_	OHB95J12T	1SCA022736R1750
Black	125	12		OHB125J12T	1SCA022652R2220

Door interlocking in ON-position prevents the door from opening when the handle is in ON-position. This can be defeated in IP65 types to allow authorized personnel access for inspection. NEMA 4, 4x pistol handles available on request. Handles padlockable in all positions available on request.

Stainless steel pistol handles OHM_ for front operation: IP 66, NEMA 4X
IP66 (NEMA 4X). Material: AISI 316. Padlockable with 3 padlocks in the OFF-position, door interlock in the ON-position.

Color	Handle length [mm]	Shaft diameter	Suitable for switches	Type	Order code
Indication in types: I-0, ON-OFF					
Grey	65	6	OTDC S1.0 - OTDC100…250E_, OTDC100…245U_ OTDC S2.0 - OTDC100…250G_, OTDC100…250UG_	OHM65L6	1SCA022739R1070
Grey	125	12	OTDC M2.0 - OTDC315…1000F_, OTDC250…1000UF_	OHM125L12	1SCA022739R1150

Ordering information for accessories IEC and UL

Handles and shafts



OHB_

Pistol handles OH_ handles for side operation: IP 65, NEMA 1,3R, 12
For mounting on the side of the enclosure. Padlockable with three padlocks in OFF-position, door interlock in ON-position. The position indications are rotated 90°.

Color	Handle length [mm]	Shaft diameter	Suitable for switches	Type	Order code
Indication in types OHB and OHY: I-0/ON-OFF					
Black	65	6	OTDC S2.0 - OTDC100…250G_, OTDC100…250UG_	OHB65J6E00S	1SCA022382R9850
Red-yellow	65	6		OHY65J6E00S	1SCA022382R9930
Black	145	12	OTDC M2.0 - OTDC315…630F_, OTDC250…600UF_	OHB145J12E00S	1SCA022679R9700
Indication in type OHB : Test/I-O/ON-OFF					
Black	65	6	OTDC S2.0 - OTDC100…250G_, OTDC100…250UG_	OHB65J6TE00S	1SCA109016R1001



OXP6X

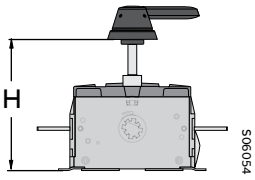

OXP_X_

Shafts for pistol handles

Shaft length [mm]	Mounting depth H [mm]		Type	Order code
	OTDC S1.0	OTDC S2.0		
Suitable for switches OTDC S1.0 and OTDC S2.0, shaft diameter 6 mm				
130	109…174	120…188	OXP6X130	1SCA022057R0570
150	129…194	140…208	OXP6X150	1SCA022295R5600
161	140…205	151…219	OXP6X161	1SCA022067R1760
210	189…254	200…268	OXP6X210	1SCA022295R6080
Suitable for switches OTDC M - OTDC315…1000F_, OTDC250…1000UF_, shaft diameter 12 mm				
166	146…226		OXP12X166	1SCA022325R7100
185	165…255		OXP12X185	1SCA022325R6710
250	230…310		OXP12X250	1SCA022325R6980
280	260…340		OXP12X280	1SCA022137R5140
325	305…385		OXP12X325	1SCA022042R5810
395	445…525		OXP12X395	1SCA022042R5990
465	439…519		OXP12X465	1SCA022042R6020
535	515…595		OXP12X535	1SCA022042R6110
Suitable for disconnectors OT1600…2500E_-135, shaft diameter 12 mm				
250	230…310		OXP12X250	1SCA022325R6980
280	260…340		OXP12X280	1SCA022137R5140
325	305…385		OXP12X325	1SCA022042R5810
395	445…525		OXP12X395	1SCA022042R5990
465	439…519		OXP12X465	1SCA022042R6020
535	515…595		OXP12X535	1SCA022042R6110

Longer shafts available on request.
Recommend shafts: 210mm shaft for OTDC S1.0 and S2.0-Series, 185mm shaft for OTDC M-Series.

Ordering information for accessories IEC and UL

Phase barriers and terminal shroud kits



OTDCB250/2



OTDCB200G/2



OTDCB400F/2



OTS250G1L



OTS250T1L



OTDCS200GG1



OTDCS400FG1

Phase barrier kit

Plastic phase separators for maintaining 1" clearance between the phases without terminal shrouds. Snap-on mounting. Phase barriers included as standard in OTDC switches with pole configuration 02/20/22/33, installation is mandatory.

Color	Suitable for switches	Type	Order code	Pieces/ Package
White	OTDC S1.0 - OTDC100…250E_, OTDC100…200U_	OTDCB250/2	1SCA148901R1001	2
Grey	OTDC S2.0 - OTDC100…250G_, OTDC100…200UG_	OTDCB200G/2	1SCA161883R1001	2
Grey	OTDC M - OTDC315…1000F_, OTDC250…1000UF_	OTDCB400F/2	1SCA157314R1001	2
Grey	OT(M)1600...2500E_-135	OTB1600/6	1SCA102667R1001	6

Terminal shroud kit

Plastic terminal shrouds. The terminal shroud kits for OTDC S2.0 and OTDC M-Series can be used with UL mechanical lugs.

Color	Suitable for switches		Type	Order code	Pieces/ Package
Grey	OTDC S1.0 - OTDC100…250E_, OTDC100…245U_		OTS250G1L	1SCA022715R5340	1
Transparent			OTS250T1L	1SCA022726R0640	1
Grey	OTDC S2.0 - OTDC100…250G_, OTDC100…250UG_		OTDCS200GG1	1SCA161884R1001	1
Grey	OTDC M - OTDC315…800F_, OTDC250…600UF_		OTDCS400FG1	1SCA157308R1001	1
Transparent			OTDCS400FT1	1SCA157309R1001	1
		Short	OTS1600G1S	1SCA102667R1001	1
		Long	OTS1600G1L	1SCA106134R1001	1
		Short	OTS1600G1S/4	1SCA022871R9860	4
Grey	OT(M)1600E_-135	Long	OTS1600G1L/4	1SCA022871R9780	4
		Short	OTS2500G1S	1SCA108810R1001	1
		Long	OTS2500G1L	1SCA108816R1001	1
		Short	OTS2500G1S/4	1SCA107271R1001	4
Grey	OT(M)2500E_-135	Long	OTS2500G1L/4	1SCA107262R1001	4

Ordering information for accessories IEC and UL

Connection bar kits and circuits



OEZXY91



OTDCKIT250S11

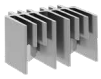

OTDCKIT250GS11



OTDCKIT250GS101



OTDCKIT400FS101



OTDCKIT600FS101



OTDCKIT400FS11



OTDCKIT600FS11



OTDCKIT800FS11

Connection bar kits

The kits include the necessary mounting hardware. The kits include the necessary mounting hardware.
Special circuits (including grounded) can be created by installing connection bar kits to OTDC switches.

Suitable for switches		Type	Order code	Pieces/ Package
OTDC S1.0	OTDC100…200U_11	OEZXY91	1SCA125290R1001	1
	OTDC100…250E_22, OTDC100…200U_22	OTDCKIT250S11	1SCA148902R1001	1
OTDC S2.0	OTDC100...250_G_11	OTDCKIT250GS101	1SCA161881R1001	1
	OTDC100...250_G_22/02S	OTDCKIT250GS11	1SCA161882R1001	1
OTDC M	OTDC250…400-F_11	OTDCKIT400FS101	1SCA157317R1001	1
	OTDC600...630UF_11	OTDCKIT600FS101	1SCA157319R1001	1
	OTDC250…400-F_22/02S	OTDCKIT400FS11	1SCA157318R1001	2
	OTDC600...630UF_22/02S	OTDCKIT600FS11	1SCA157320R1001	2
	OTDC800...1000-F_22	OTDCKIT800FS11 [1]	1SCA160635R1001	4
OT1600E_-135	OT1600E04, OT1600E22	OTDCKIT1250B11	1SCA143479R1001	2
OT2500E_-135	OT2500E04, OT2500E22, OTM2500E4M230V-135	OTKIT2500B11	1SCA160501R1001	4

[1] Connection bar kit OTDCKIT800FS11 included with the package – installation mandatory.
See special circuits (including grounded) in pages 56-59.

Ordering information for accessories IEC and UL

Connection bar kits and circuits

Connection bar kits to create Single circuit 1a

Circuit 1a

2-pole, 2-wire, 1-circuit

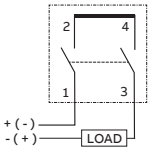

For grounded systems

Suitable for switches			Connection bar kit	Order code	Required kit qty	Connection bars pcs/kit
OTDC S1.0	OTDC100...250_11		OEZXY91	1SCA125290R1001	1	1
OTDC S2.0	OTDC100...250_G_11		OTDCKIT250GS101	1SCA161881R1001	1	1
	OTDC100...250_G_02S		OTDCKIT250GS11	1SCA161882R1001	1	1
OTDC M	OTDC250...500_F_11		OTDCKIT400FS101	1SCA157317R1001	1	1
	OTDC600...630_F_11		OTDCKIT600FS101	1SCA157319R1001	1	1
	OTDC250...400_F_02S		OTDC400FS11	1SCA157318R1001	1	2
	OTDC600...630_F_02S		OTDC600FS11	1SCA157320R1001	1	2

Ordering information for accessories IEC and UL

Connection bar kits and circuits

Connection bar kits to create Double circuit 3

	Suitable for switches			Connection bar kit	Order code	Required kit qty	Connection bars pcs/ kit
Circuit 3 4-pole, 4-wire, 2-circuit 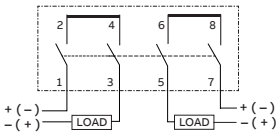 **For grounded systems**	OTDC S1.0	OTDC100…250E_22, OTDC100…200U_22		OTDCKIT250S11	1SCA148902R1001	2	1
	OTDC S2.0	OTDC100…250_G_ 22		OTDCKIT250GS11	1SCA161882R1001	2	1
	OTDC M	OTDC250…500_F_22		OTDCKIT400FS11	1SCA157318R1001	1	2
		OTDC600…630_F_22		OTDCKIT600FS11	1SCA157320R1001	1	2

Ordering information for accessories IEC and UL

Connection bar kits and circuits

Connection bar kits to create Single circuit G5a, G5b, G5e *)

	Suitable for switches		Connection bar kit	Order code	Required kit qty	Connection bars pcs/ kit
Circuit G5a, G5b, G5e **3-pole, 4-wire, 1-circuit**	OTDC S2.0	OTDC100…250_G_12	OTDCKIT250GS11	1SCA161882R1001	1	1
		OTDC100…250_G_21	OTDCKIT250GS11	1SCA161882R1001	1	1
	OTDC M	OTDC250…500_F_12	OTDCKIT400FS11	1SCA157318R1001	1	2
		OTDC600…630_F_12	OTDCKIT600FS11	1SCA157320R1001	1	2
		OTDC250…500_F_21	OTDCKIT400FS11	1SCA157318R1001	1	2
		OTDC600…630_F_21	OTDCKIT600FS11	1SCA157320R1001	1	2

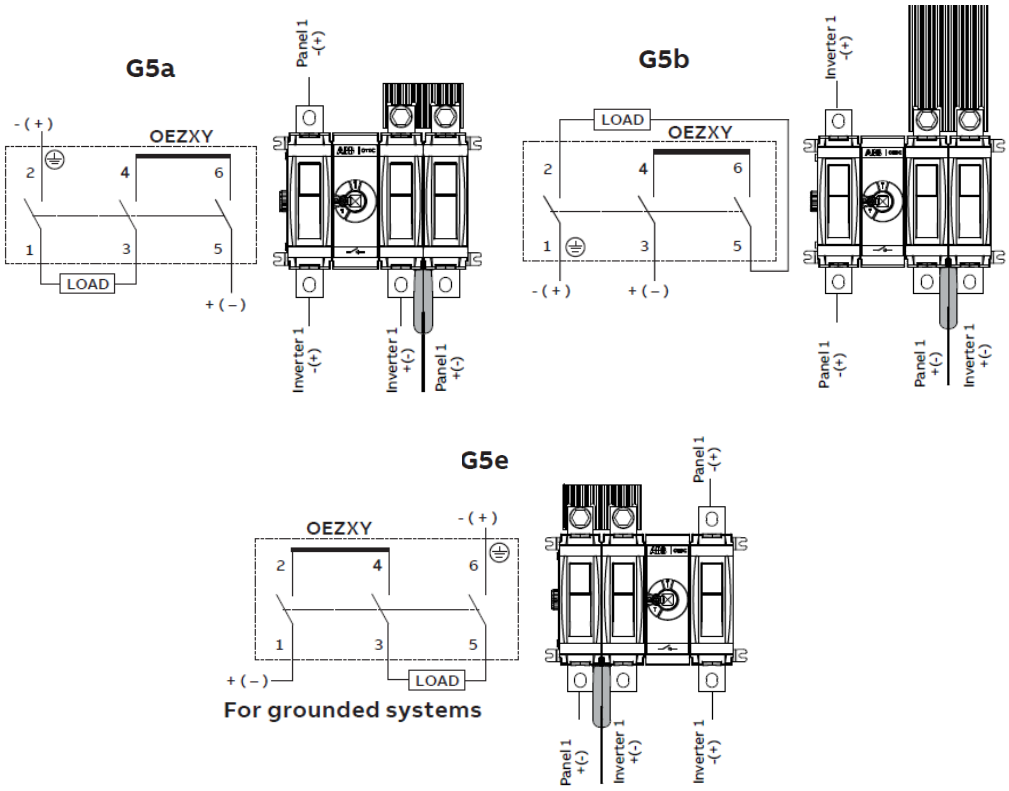

*) Please consult us for 3-Pole OTDC S2.0 and M types

Ordering information for accessories IEC and UL

Connection bar kits and circuits

Connection bar kits to create Single circuit G6a, G6b

	Suitable for switches		Connection bar kit	Order code	Required kit qty	Connection bars pcs/ kit
Circuit G6a, G6b **4-pole, 4 wire, 1-circuit**	OTDC S2.0	OTDC100…250_G_22	OTDCKIT250GS11	1SCA161882R1001	2	1
	OTDC M	OTDC250…500_F_22	OTDCKIT400FS11	1SCA157318R1001	1	2
		OTDC600…630_F_22	OTDCKIT600FS11	1SCA157320R1001	1	2

G6a

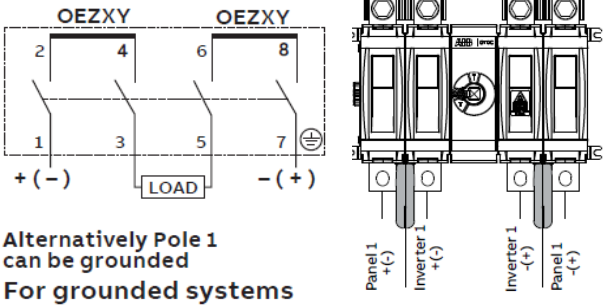

Alternatively Pole 1 can be grounded

For grounded systems

G6b

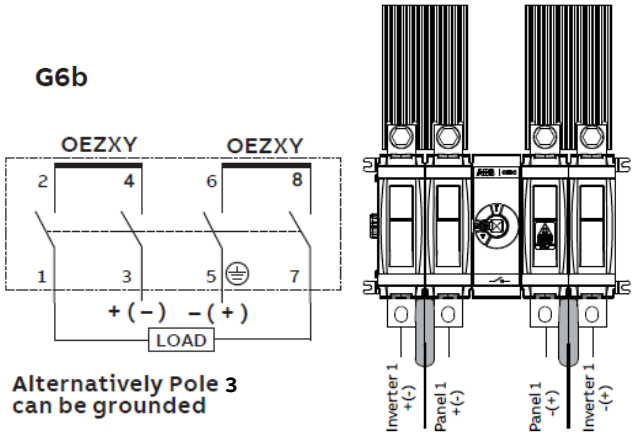

Alternatively Pole 3 can be grounded

Ordering information for accessories IEC and UL

Mechanical lugs



OZXA200



OZXA402



OZXA604



OZXA100



OZXA252

Mechanical lugs
Mechanical lugs for Al and Cu cables for IEC OTDC switch-disconnectors and OT(M)_-135 disconnectors

Suitable for switches	Cable cross section [mm²]	Type	Order code	Pieces/ Package
OTDC S1.0 OTDC100…250E_	10…70	OZXB1L/1	1SCA022194R0030	1
	25…120	OZXB2/1	1SCA022194R0200	1
	25…120	OZXB2L/1	1SCA022194R0460	1
	95…185	OZXB3/1	1SCA022136R8100	1
	2x(95…185)	OZXB4/1	1SCA022194R0890	1
	120…300	OZXB5/1	1SCA022194R1010	1
	2x(120…300)	OZXB6/1	1SCA022194R1270	1
OT(M)1600...2500E_-135	120…240	OZXB7L/1	1SCA022194R1600	1

Mechanical lugs
Mechanical lugs for Al and Cu cables for UL OTDC switch-disconnectors

Suitable for switches		Wire range AWG	Type	Order code	Pieces/ Package
OTDC S1.0	OTDC100…200U_	AWG 4 - 300MCM	OZXA-200/4	1SCD000008R0012	4
OTDC S2.0	OTDC100UG_	AWG 14-10 AWG 8 AWG 6-4 AWG 3-2/0	OZXA-100/4P	1SCD000003R0012	4
	OTDC100...200UG_	AWG 4 - 300MCM	OZXA-200/4	1SCD000008R0012	4
	OTDC250UG_	2 x AWG 14 - 2/0	OZXA-252/4	1SCD000139R0012	4
OTDC M	OTDC250…400UF_	2 x AWG 6 - 300MCM	OZXA-402/4	1SCD000138R0012	4
	OTDC600UF_	2 x AWG 6 - 300MCM	OZXA-604	1SCA157322R1001	4
	OTDC800…1000UF_	2 x AWG 2 - 600MCM	OZXA-804	1SCA161408R1001	4

Ordering information for accessories IEC and UL

Auxiliary contacts



OA1G10, OA3G01

Auxiliary contact blocks, IP20

Contact numbering according to EN 50013. The type and the ordering numbers are for one piece.

Auxiliary contacts
Mounting under the mechanism cover.
OTDC S1.0 - OTDC100…250E, OTDC100…200U_: Max. 4 test contacts or 2 test contacts + 2 test indication contacts.
OTDC S2.0 - OTDC100…250G, OTDC100…250UG_: Max. 1 test contact + 1 test indication contact.
OTDC M - OTDC315…1000F_, OTDC250…1000UF_: Max. 4 test contacts + 4 test indication contacts.
OT(M)1600...2500E_-135 : Max. 6 test contacts + 4 test indication contacts + 2 early operation test contacts.

Suitable for switches	Function	Type	Order code	Pieces/ Package
OTDC100...1000_, OT(M)1600...2500E_-135	1NO	OA1G10	1SCA022353R4970	10
	1NC	OA3G01	1SCA022456R7410	10

Module for auxiliary contacts
Screw mounting to the left side of the switch. Max. 8 auxiliary contact blocks with the OEA28 module.

Suitable for switches	Type	Order code	Pieces/ Package
OTDC S1.0 - OTDC100…250E, OTDC100…200U_	OEA28	1SCA022714R8810	1

Performance data according to IEC 60947-5-1
For OA1G, OA3G

	AC15		DC12		DC13	
U_e/[VAC]	I_e/[A]	U_e/[V DC]	I_e/[A]	P/[W]	I_e/[A]	P/[W]
230	6	24	10	240	2	50
400	4	72	4	290	0.8	60
415	4	125	2	250	0.55	70
690	2	250	0.55	140	0.27	70
-	-	440	0.1	44	-	-

Ordering information for accessories IEC and UL

Interlocks



OSZT1L



OTDCZTML



PDAL2

Mechanical/electrical interlock kit

OTDC switch-disconnectors can be interlocked in the ON and OFF-position using padlocks or a mechanical/eletrical interlock kit mounted on the mechanism. The diameter of the lock bail can be max 8 mm. Kit includes the mounting hardware. Coil for the electrical interlock needs to be ordered separately.

Suitable for switches		Type	Order code
OTDC S1.0	OTDC100...250E_, OTDC100...200U_	OSZT1L	1SCA106538R1001
OTDC M	OTDC250...1000_F_*)	OTDCZTML	1SCA162042R1001

*) Limitations to use of auxiliary contacts, max. 2 test contacts + 2 test indication contacts.

Suitable for disconnector	Mechanical interlock function	Type	Order code
	OFF	OTZT4A	1SCA106526R1001
OT1600...2500E_-135	ON and OFF	OTZT4L	1SCA106531R1001

Coils for electrical interlocks

The switch can be interlocked electrically in the OFF- and ON-positions by installing a coil inside the housing of the interlock kit. The electrical interlock works using the “closed circuit principle”, meaning that when the control voltage is not connected to the coil.

Suitable for switches	Type	Order code	Weight/ unit kg
AC coils			
110V AC, 50 Hz	PDAL2/110AC50Hz	1SCA106543R1001	0.15
110V AC, 60 Hz	PDAL2/110AC60Hz	1SCA107100R1001	0.15
120V AC, 60 Hz	PDAL2/120AC60Hz	1SCA111353R1001	0.15
208V AC, 60 Hz	PDAL2/208AC60Hz	1SCA107101R1001	0.15
230V AC, 50 Hz	PDAL2/230AC50Hz	1SCA107102R1001	0.15
240V AC, 60 Hz	PDAL2/240AC60Hz	1SCA111356R1001	0.15
DC coils			
24V DC	PDAL2/24DC	1SCA106542R1001	0.15
48V DC	PDAL2/48DC	1SCA107103R1001	0.15
110V DC	PDAL2/110DC	1SCA107105R1001	0.15
125V DC	PDAL2/125DC	1SCA111338R1001	0.15
220V DC	PDAL2/220DC	1SCA112503R1001	0.15
Technical data for the coil			
Operating voltage	U = 0.8...1.1 x U_n		
Operating ambient temperature	-40°C...+65°C		
Power consumption	with AC 6.5W		
	with DC 9VA		

08

Dimensional drawings

08.1. Dimensional drawings, OTDC XS-Series

08.2. Dimensional drawings, OTDC S1.0-Series

08.3. Dimensional drawings, OTDC S2.0-Series

08.4. Dimensional drawings, OTDC M-Series

08.5. Dimensional drawings, OT(M)_-135 - Series

08.6. Dimensional drawings, accessories

Dimensional drawings

OTDC XS-Series 16...32 Amperes (IEC)

OTDC16, 25, 32F_

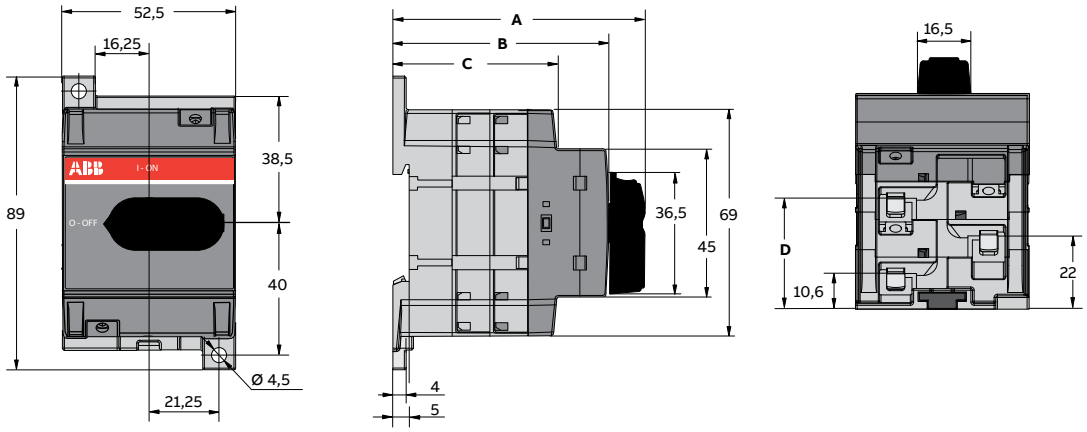

Number of poles	A	B	C	D
2	66,2	54,1	38,3	22
3	77,6	65,5	49,7	33,4
4	89	76,9	61,1	44,8

OTDC16, 25, 32FT_

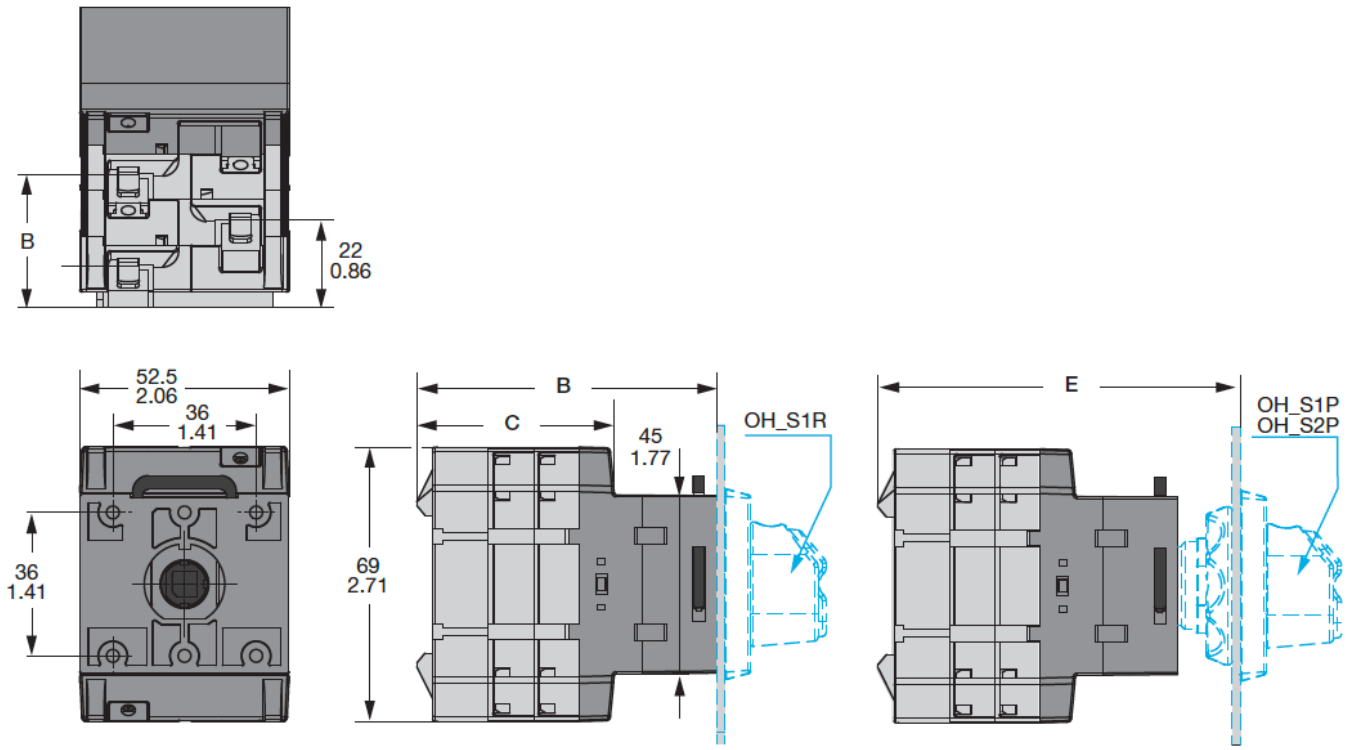

Dimensional drawings

OTDC XS-Series 16...32 Amperes (IEC and UL)

OTDC 16, 25, 32U_

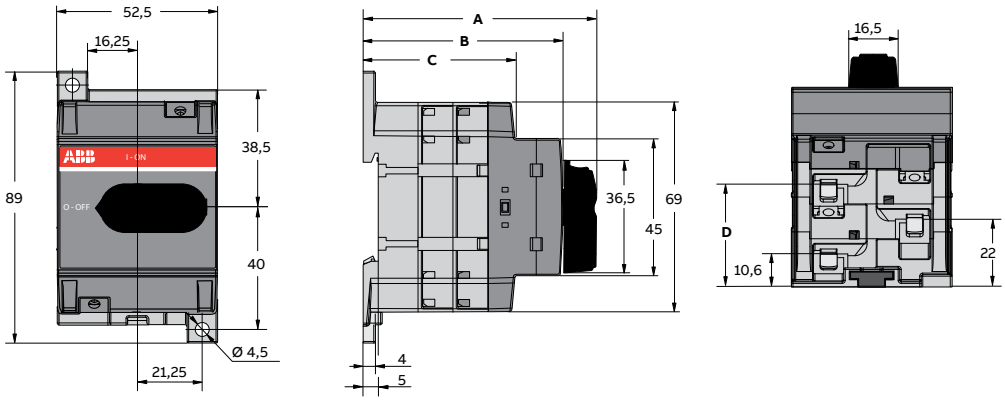

[mm/in]	02	04	06
A	64/2,52	87/3,43	109,5/4,31
B	54/2,13	77/3,03	100/3,94
C	38,5/1,52	61/2,40	84/3,31
D	22/0,87	45/1,77	67,5/2,66

OTDC 16, 25, 32U_T_

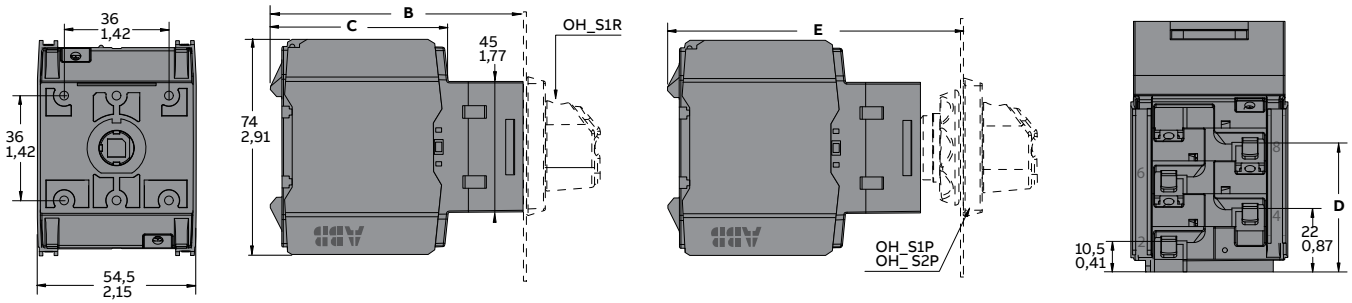

[mm/in]	02	04	06
B	64/2,52	87/3,43	110/4,33
C	38/1,50	61/2,40	84/3,31
D	22/0,87	45/1,77	68/2,68
E	79/3,11	102/4,02	124,5/4,9

Dimensional drawings

OTDC S1.0 - 100...250 Amperes (IEC and UL)

OTDC100, 160, 200, 250E11/_22, OTDC100, 200U11/_22

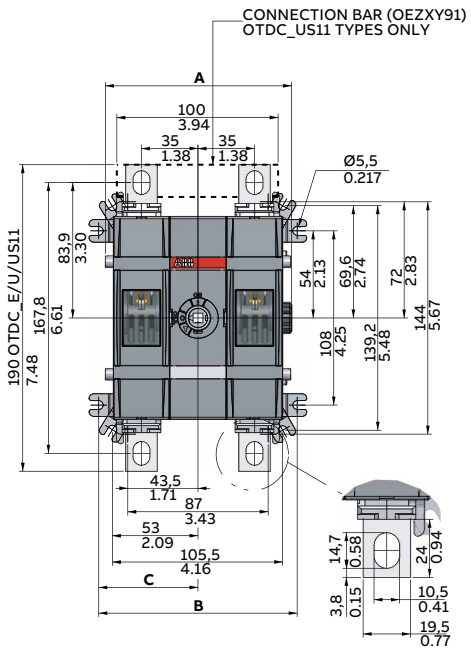

OTDC100..250E11, OTDC100..200U11

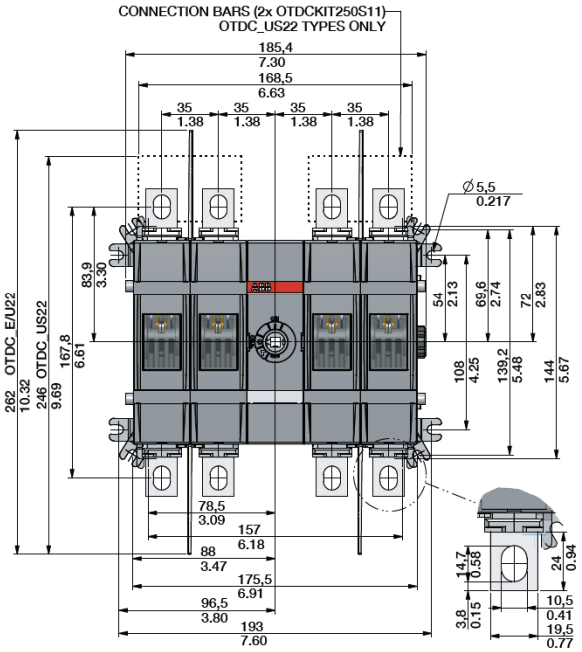

OTDC100..250E22, OTDC100..200U22

[mm/in]	11	22
A	115,4/4.54	185,4/7.30
B	123/4.84	193/7.60
C	61,5/2.42	96,5/3.80

OTDC100...250E33, OTDC100...200U33

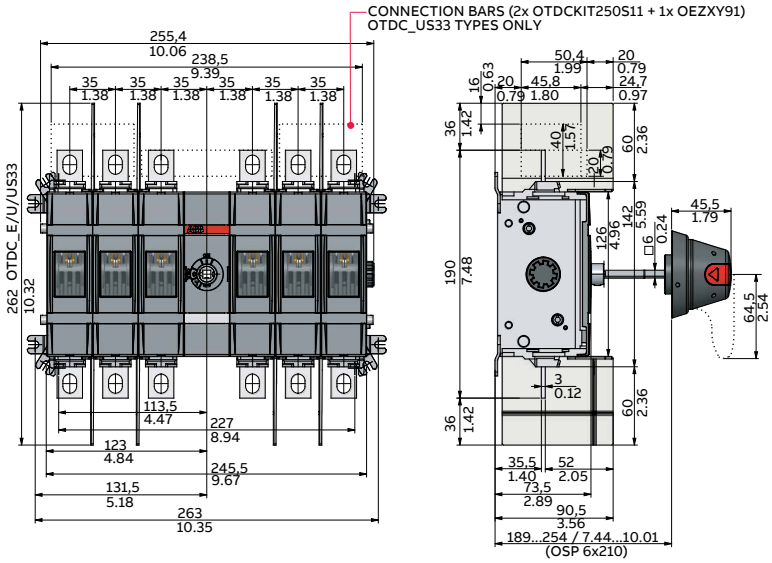

Dimensional drawings

OTDC S2.0 - 100...250 Amperes (IEC and UL)

OTDC100, 160, 200, 250G_11, OTDC100, 200, 250UG_11
OTDC100, 160, 200, 250G_11-ESS, OTDC100, 200, 250UG_11-ESS

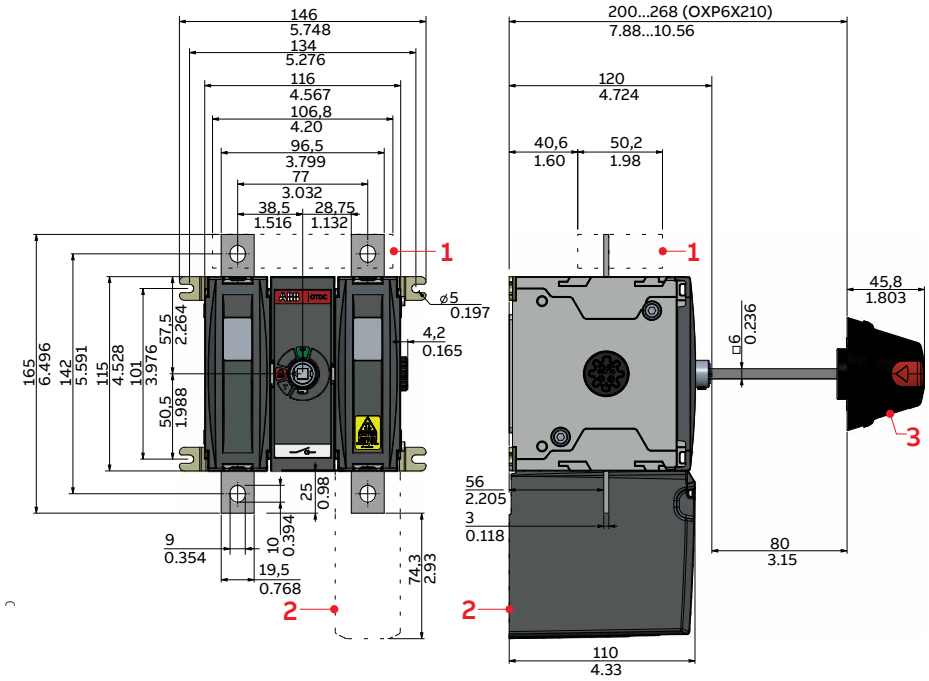

Pos.	Accessory	Description
1	Connection bar kit	OTDCKIT250GS101
2	Terminal shroud	OTDCS200GG1
3	Handle	OH_65J6

OTDC100...250GV_K
OTDC100...250UGV_K

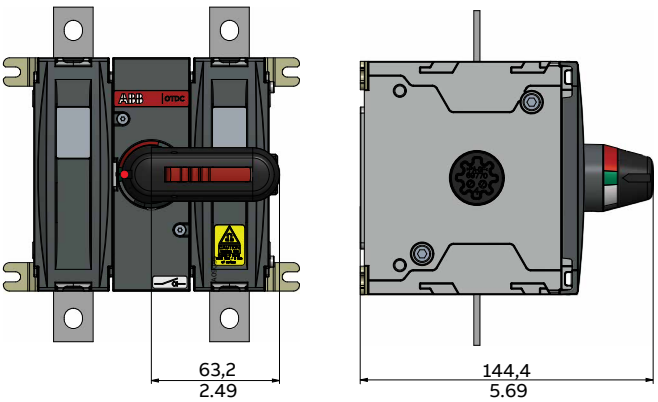

Dimensional drawings

OTDC S2.0 - 100...250 Amperes (IEC and UL)

OTDC100, 160, 200, 250G_22
OTDC100, 200, 250UG_22

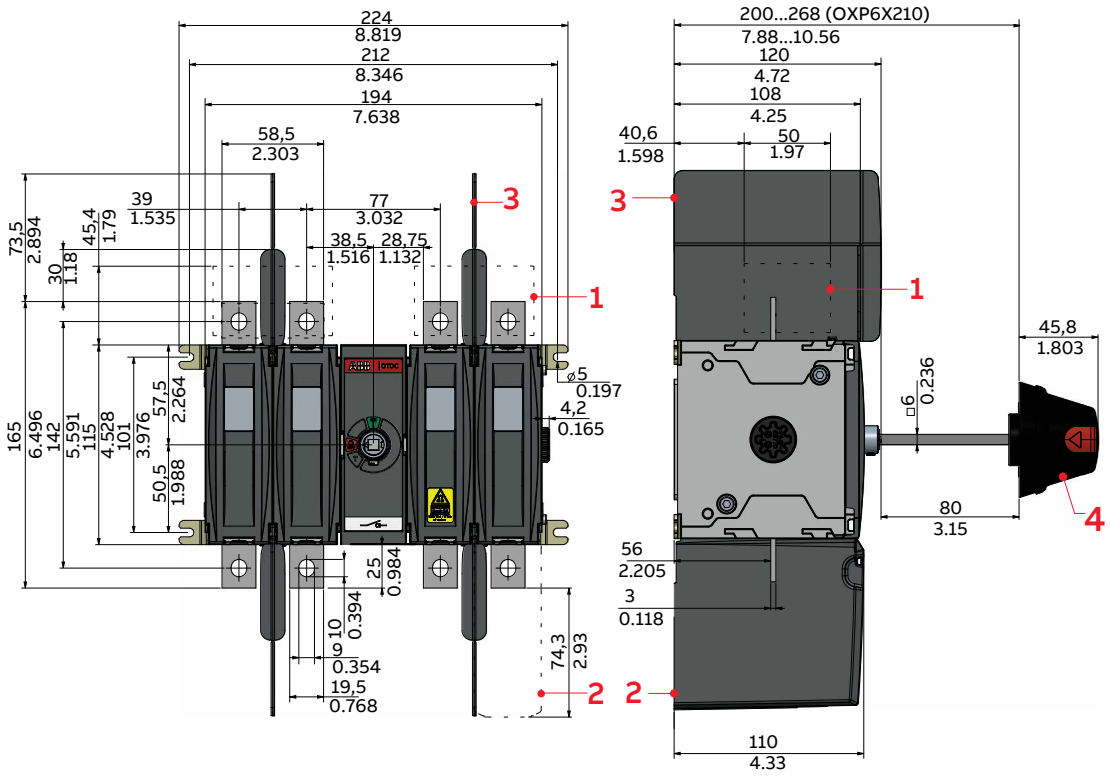

Pos.	Accessory	Description
1	Connection bar kit	OTDCKIT250GS11
2	Terminal shroud	OTDCS200GG1
3	Phase barrier	OTDCB200/2
4	Handle	OH_65J6

Dimensional drawings

OTDC S2.0 - 100...250 Amperes (IEC and UL)

OTDC100, 160, 200, 2500G_02S
OTDC100, 200, 250UG_02S

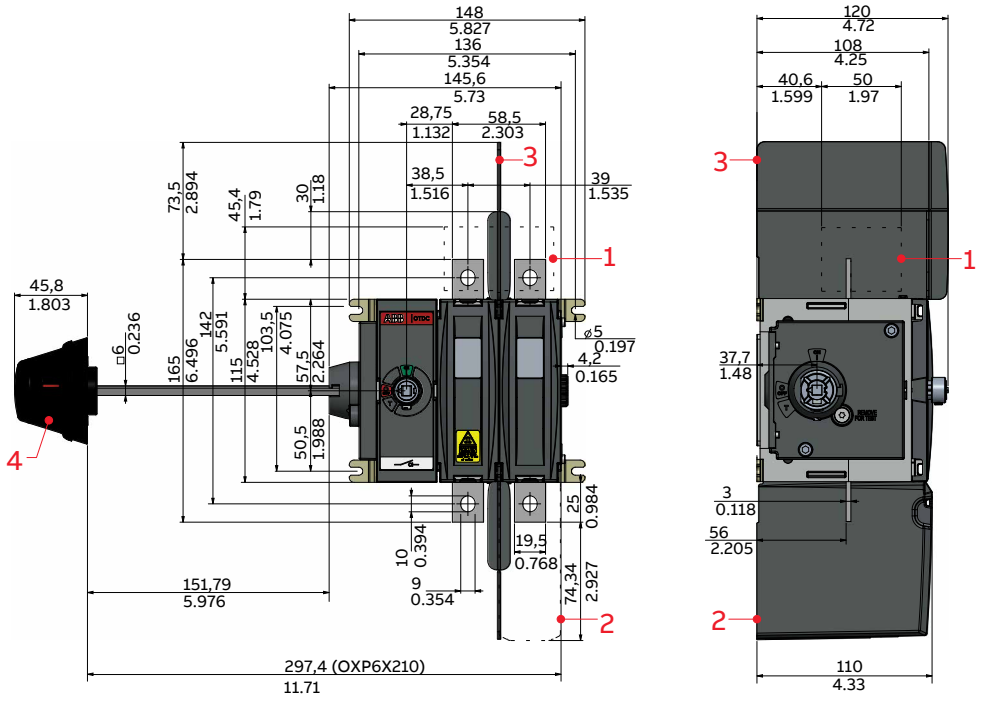

Pos.	Accessory	Description
1	Connection bar kit	OTDCKIT250GS11
2	Terminal shroud	OTDCS200GG1
3	Phase barrier	OTDCB200/2
4	Handle	OH_65J6E00S

Dimensional drawings

OTDC M – 250...1000 Amperes (IEC and UL)

OTDC315, 400, 500, 630, 800F_11, OTDC250, 320, 400, 600UF_11
OTDC315, 400, 500, 630F_11-ESS, OTDC250, 320, 400UF_11-ESS

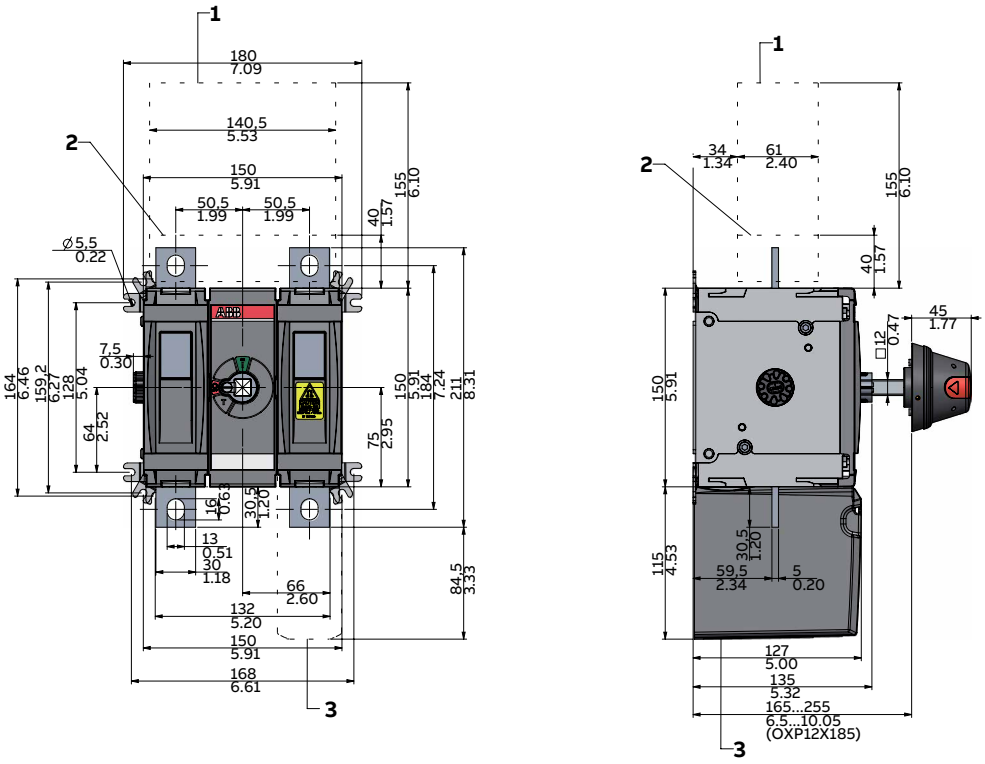

Pos.	Accessory	Description
1	Connection bar	OTDCKIT600FS101, OTDC600UF_11 only
2	Connection bar	OTDCKIT400FS101, OTDC250...400UF_11 only
3	Terminal shroud	OTDCS400FG1, OTDCS400FT1
4	Handle	OH_95J12

OTDC315...800F_K_, OTDC250...600UF_K_

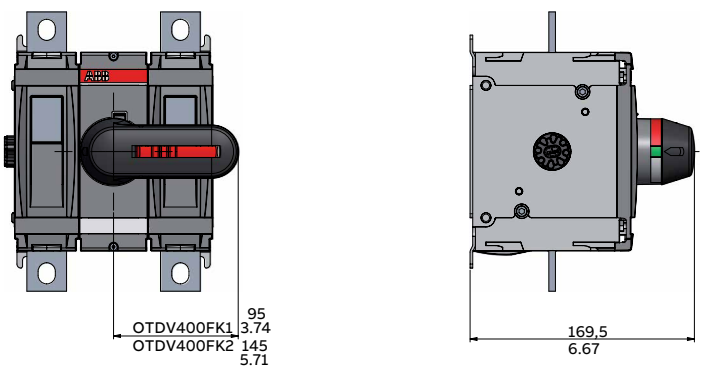

Dimensional drawings

OTDC M – 250...1000 Amperes (IEC and UL)

OTDC315, 400, 500, 630F_22
OTDC250, 320, 400, 600UF_22

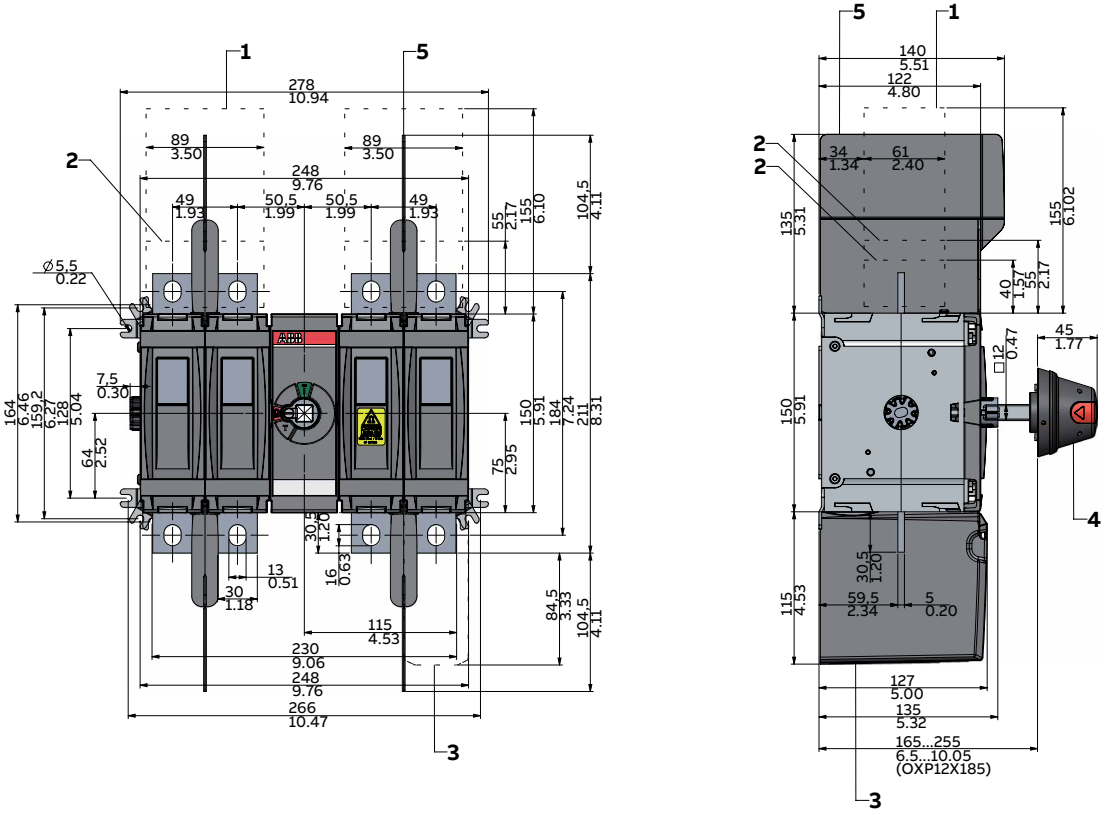

Pos.	Accessory	Description
1	Connection bar	OTDCKIT600FS11, OTDC600UF_22 only
2	Connection bar	OTDCKIT400FS11, OTDC250...400UF_22 only
3	Terminal shroud	OTDCS400FG1, OTDCS400FT1
4	Handle	OH145J12
5	Phase barrier	OTDCB400F/2

Dimensional drawings

OTDC M – 250...1000 Amperes (IEC)

OTDC315, 400, 500F_33

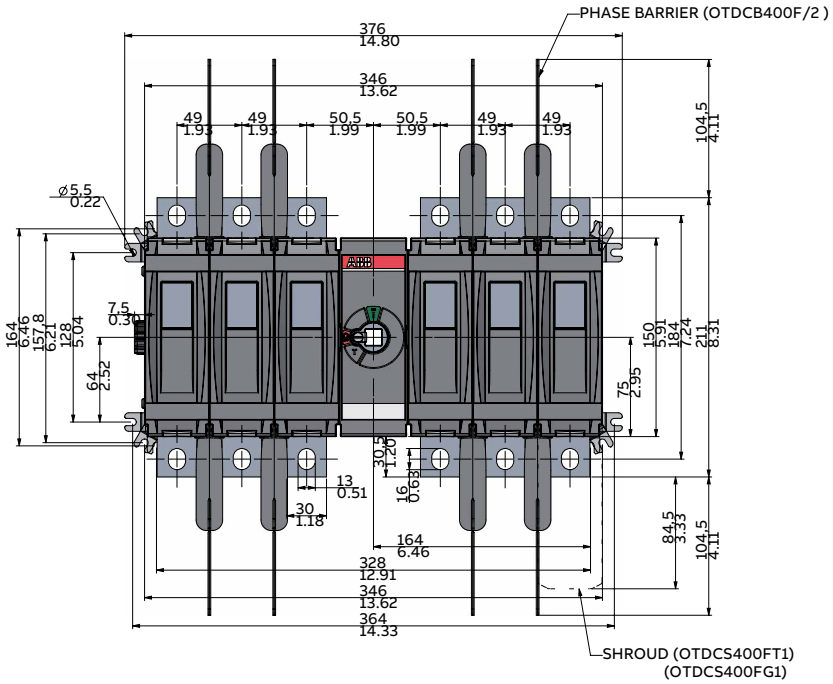

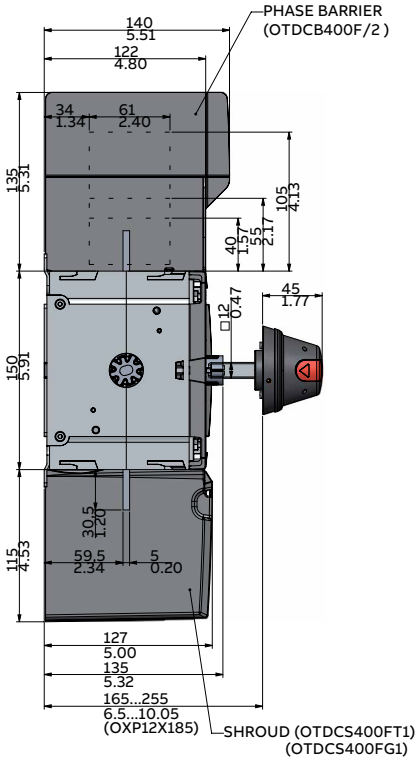

Pos.	Accessory	Description
3	Terminal shroud	OTDCS400FG1, OTDCS400FT1
4	Handle	OH_145J12
5	Phase barrier	OTDCB400F/2

Dimensional drawings

OTDC M – 250...1000 Amperes (IEC and UL)

OTDC315, 400, 500, 630FV02S
OTDC250, 320, 400, 600UFV02S

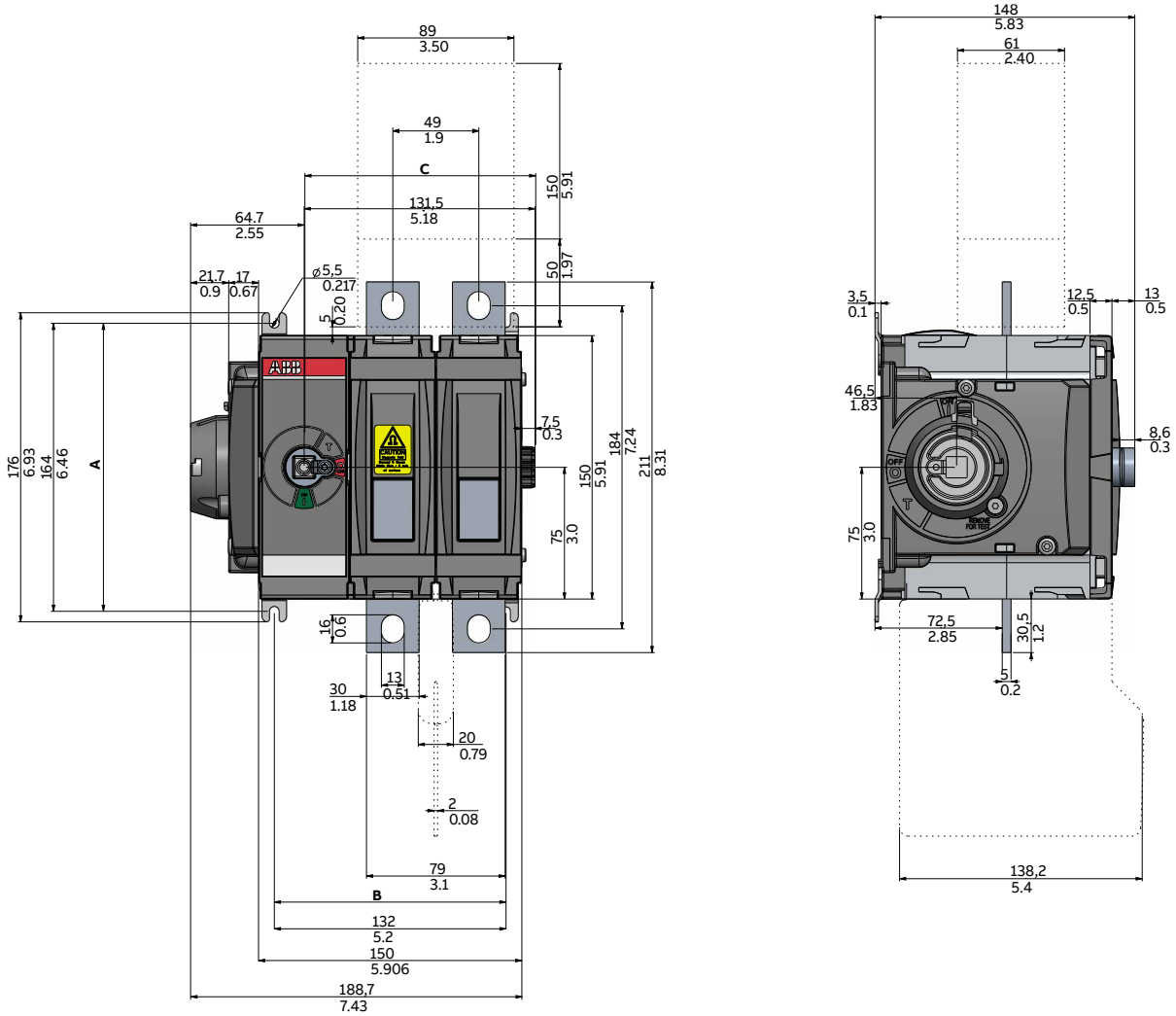

[mm/in]	02
A	164/6.46
B	132/5.2
C	131,5/5.18

Dimensional drawings

OTDC M – 250...1000 Amperes (IEC and UL)

OTDC630, 800F_22-PV2
OTDC800, 1000F_22
OTDC800, 1000UF_22
OTDC800, 1000F_22-ESS
OTDC800, 1000UF_22-ESS

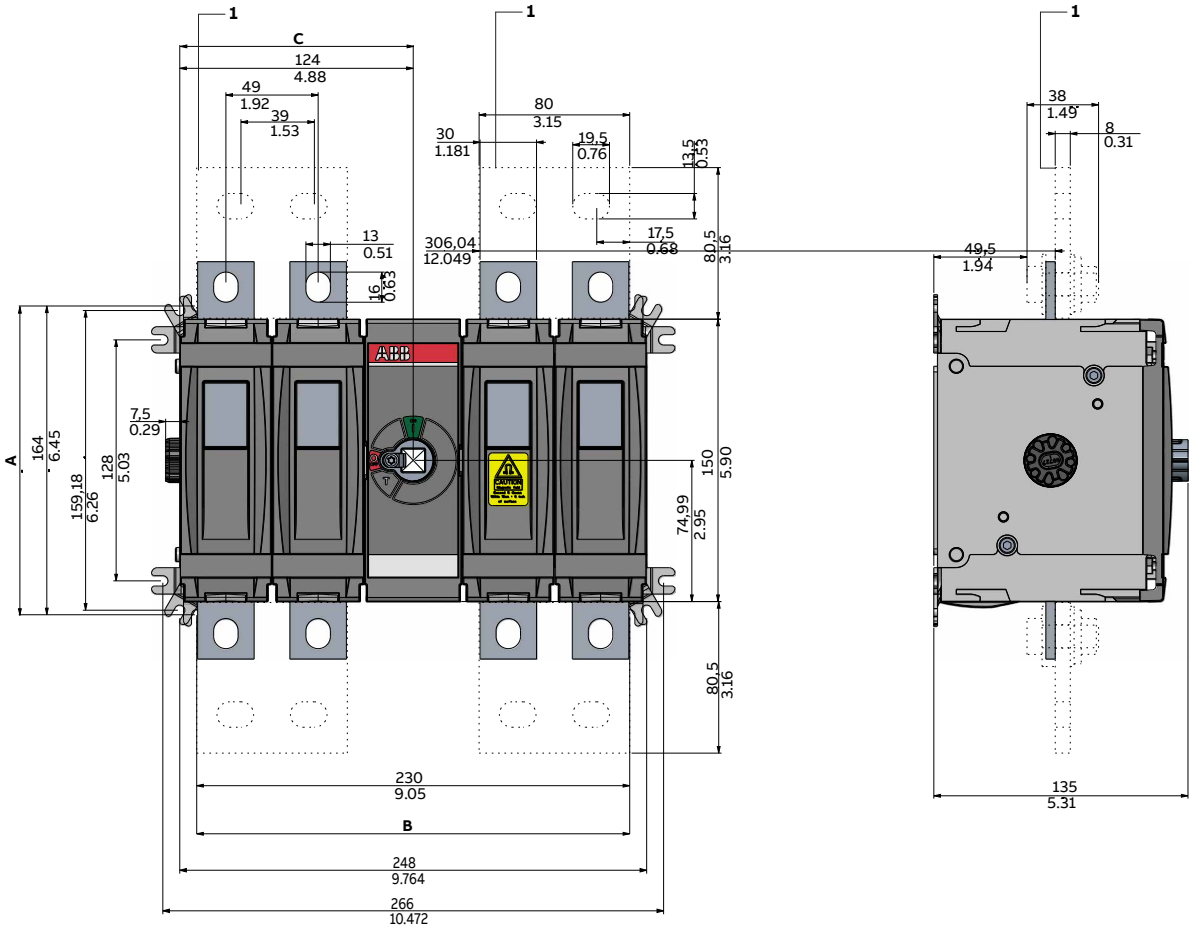

[mm/in]	22
A	164/6.46
B	230/9.055
C	124/4.882

Pos.	Accessory	Description
1	Connection bar	OTDCKIT800FS11

Connection bar included with OTDC800...1000_F_22 types – installation mandatory.

Dimensional drawings

OTM1600-2500E_-135

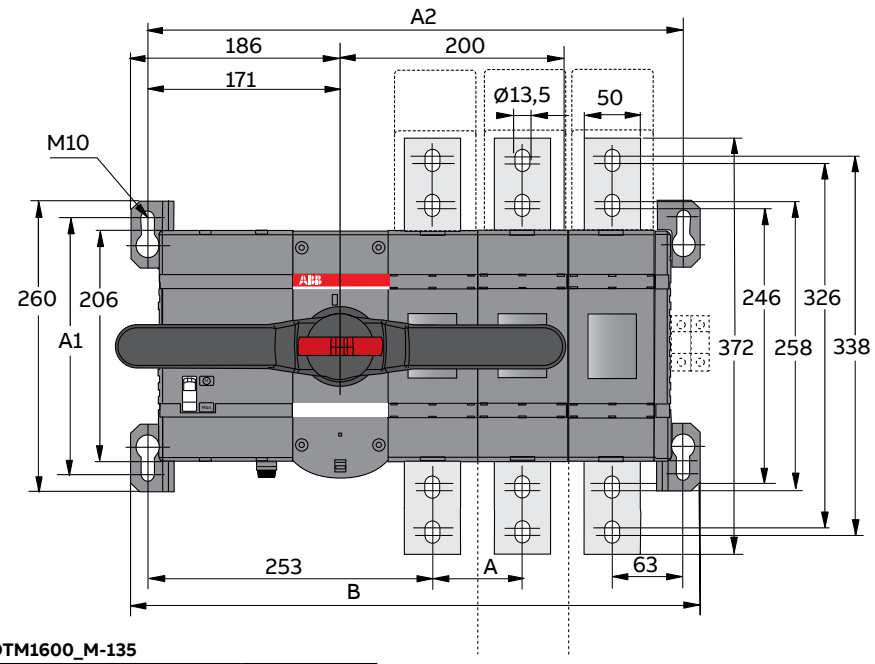

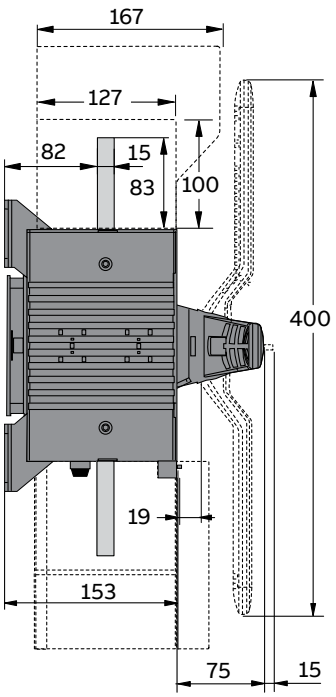

OTM1600_M-135

	E2	E4
A	80	80
A1	230	230
A2	396,5	556,5
B	426,5	586,5

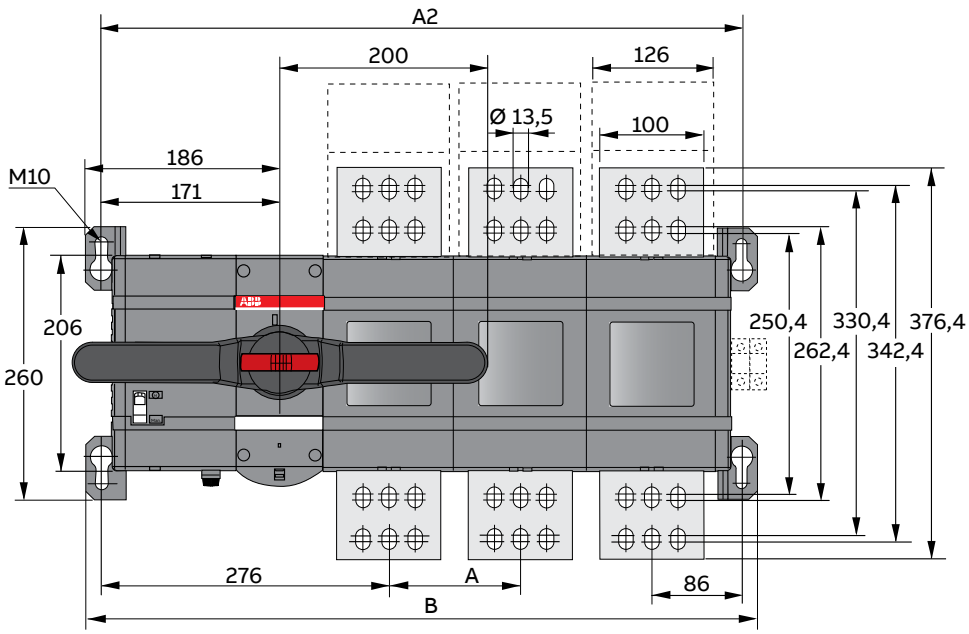

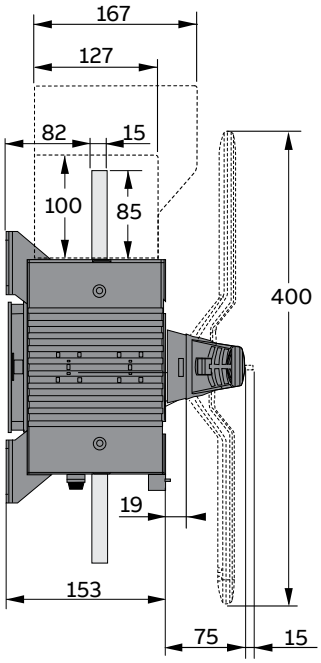

OTM2500_M-135

	E2	E4
A	126	126
A1	230	230
A2	488,5	740,5
B	518,5	770,5

Dimensional drawings

Handles

Handles for base and DIN-rail mounted OTDC 16...32_

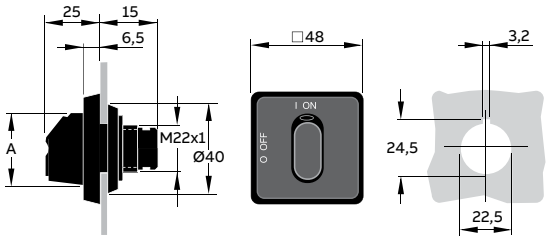

OH_S1A_, OH_S3A_

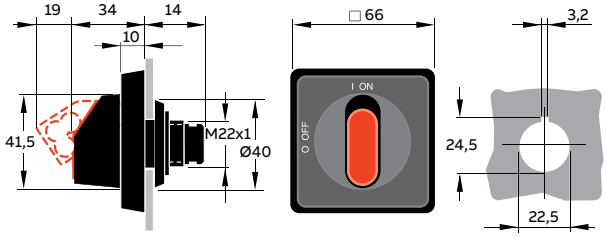

OH_S2A_

[mm]	OH_S1A_	OH_S3A_
A	31,5	37,5

Dimensional drawings

Connection bar kits

OTDC S1.0 – 100...250 Amperes (IEC and UL)

OEZXY91 (IEC and UL)

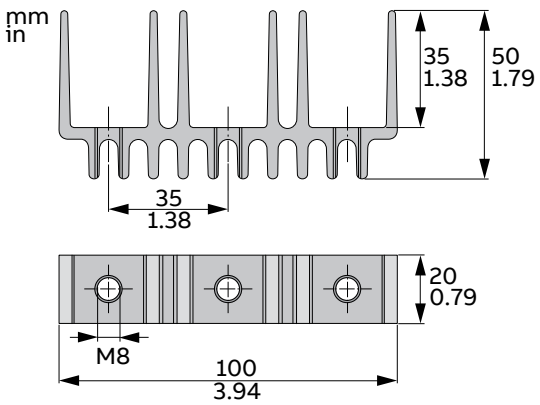

OTDCKIT250S11 (IEC and UL)

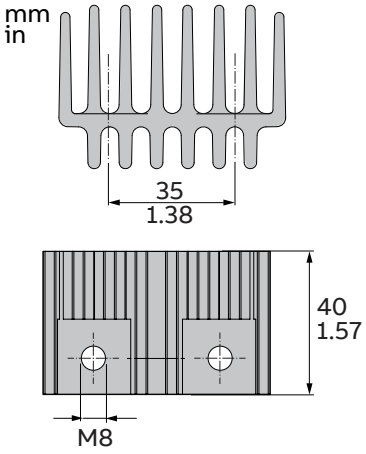

OTDC S2.0 – 100...250 Amperes (IEC and UL)

OTDCKIT250GS101

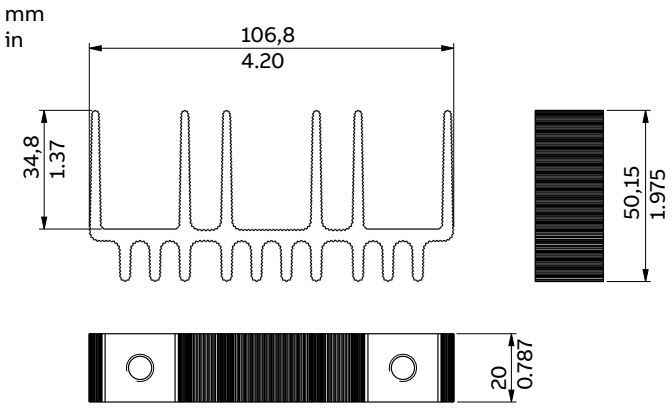

OTDCKIT250GS11

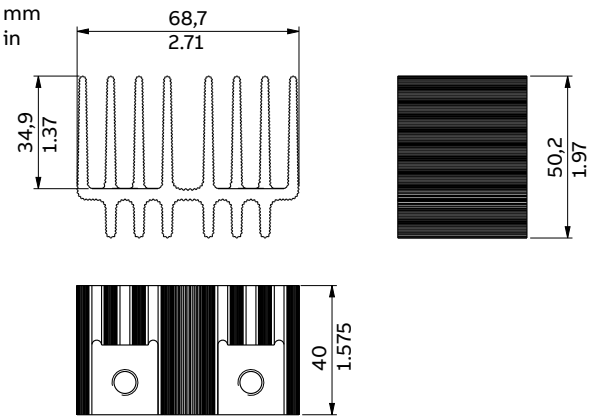

Dimensional drawings

Connection bar kits

OTDC M – 250...1000 Amperes (IEC and UL)

OTDCKIT400FS101 and OTDCKIT600FS101 (IEC and UL)

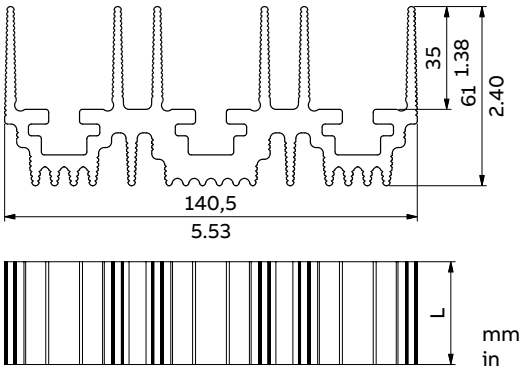

	L [mm/in]
OTDC250..400UFS(V)22	35/1.38
OTDC600UFS(V)22	150/5.91

OTDCKIT400FS11 and OTDCKIT600FS11 (IEC and UL)

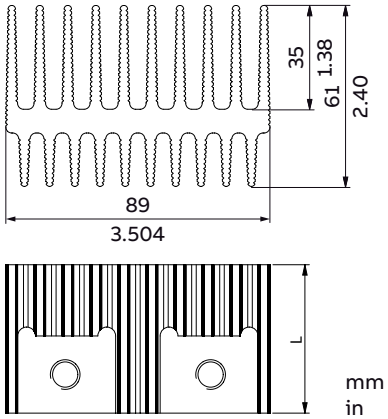

	L [mm/in]
OTDC250..400UFS(V)22	50/1.97
OTDC600UFS(V)22	150/5.91

OTDCKIT800FS11 (IEC and UL)

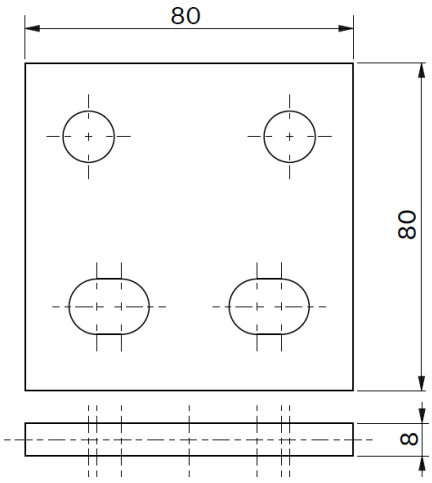

Dimensional drawings

Terminal shrouds

OTDC S1.0 – 100...250 Amperes (IEC and UL)

OTS250_1L/4

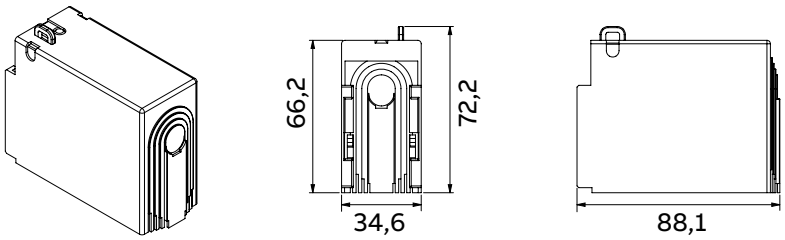

OTDC S2.0 – 100...250 Amperes (IEC and UL)

OTDCS200GG1

mm
in

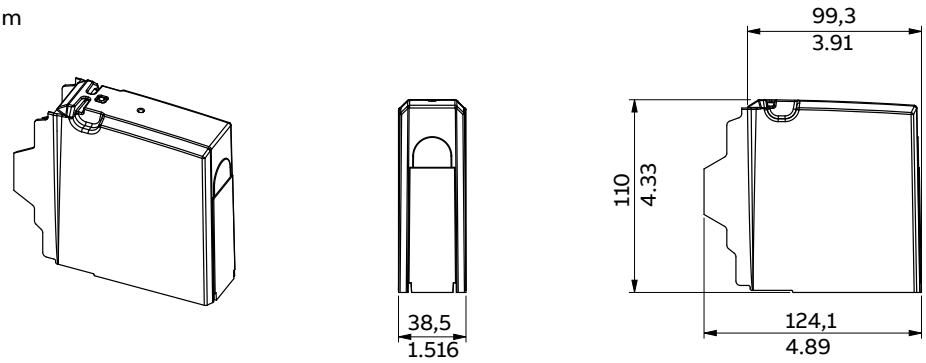

OTDC M – 250...800 Amperes (IEC and UL)

OTDCS400FG1 / OTDCS400FT1

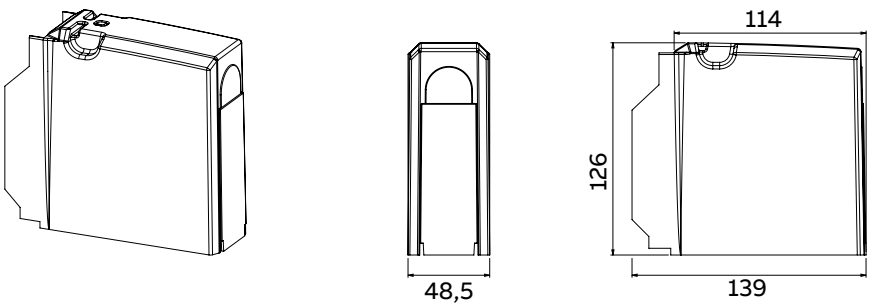

Dimensional drawings

Phase barriers

OTDC S1.0 – 100...250 Amperes (IEC and UL)

OTDCB250/2

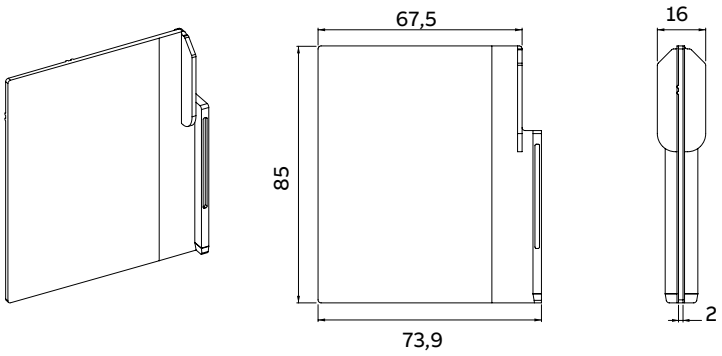

OTDC S2.0 – 100...250 Amperes (IEC and UL)

OTDCB200G/2

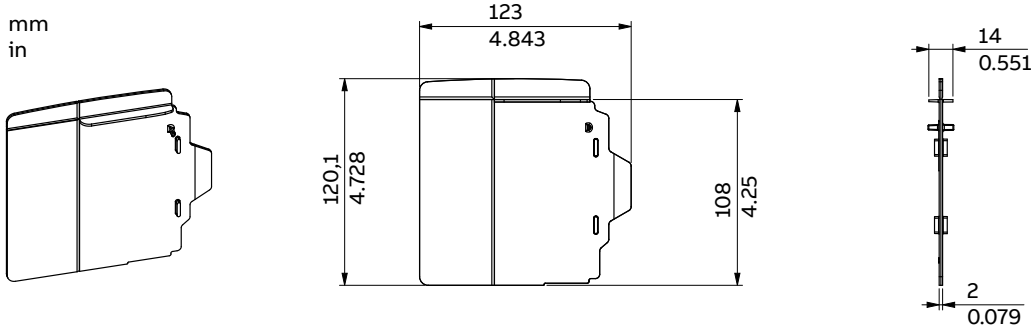

OTDC M – 250...630 Amperes (IEC and UL)

OTDCB400F/2

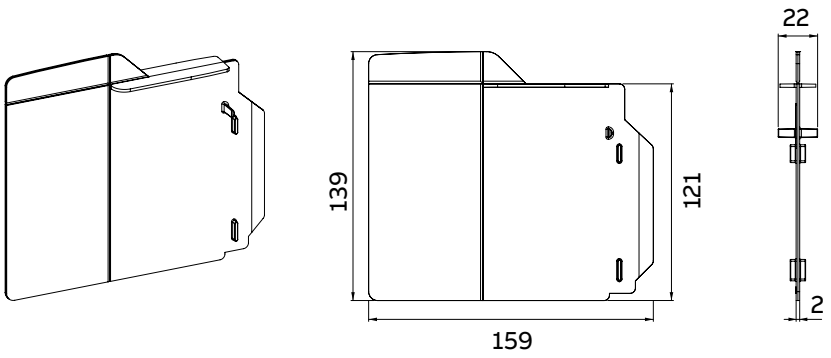

Dimensional drawings

Mechanical lugs

OTDC S1.0 – 100...250 Amperes (IEC and UL)

OZXA200

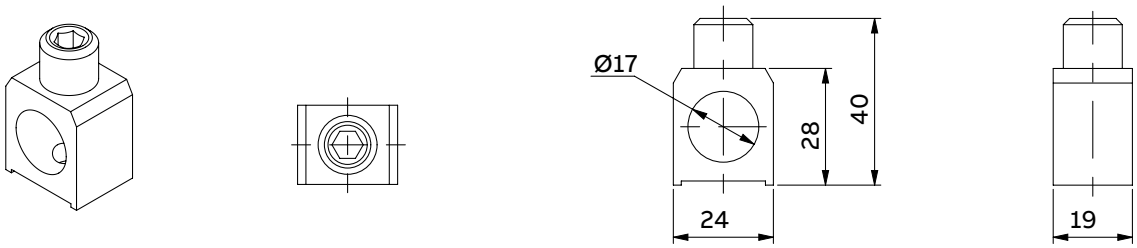

OZXB1L

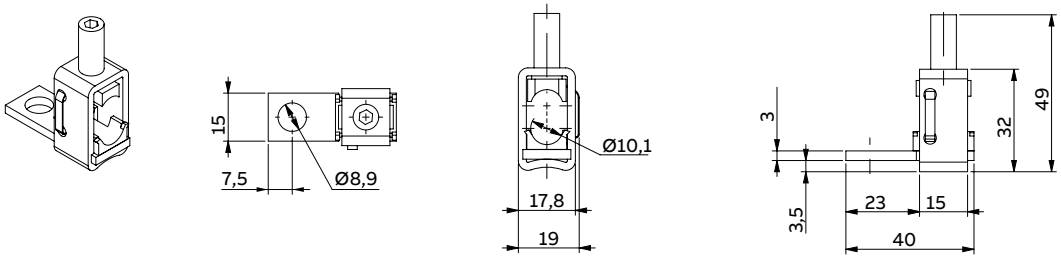

OZXB2

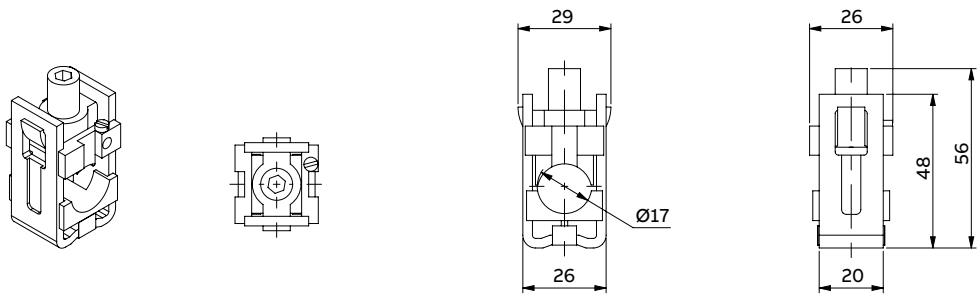

OZXB2L

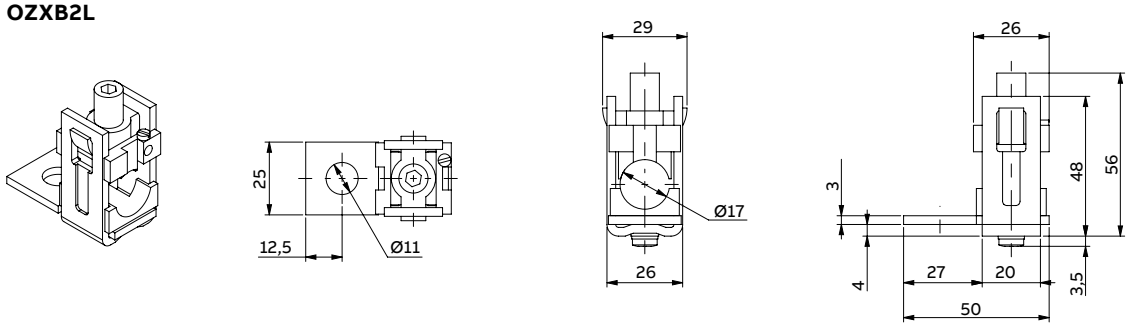

Dimensional drawings

Mechanical lugs

OTDC S2.0 – 100...250 Amperes (IEC and UL)

OZXA-100

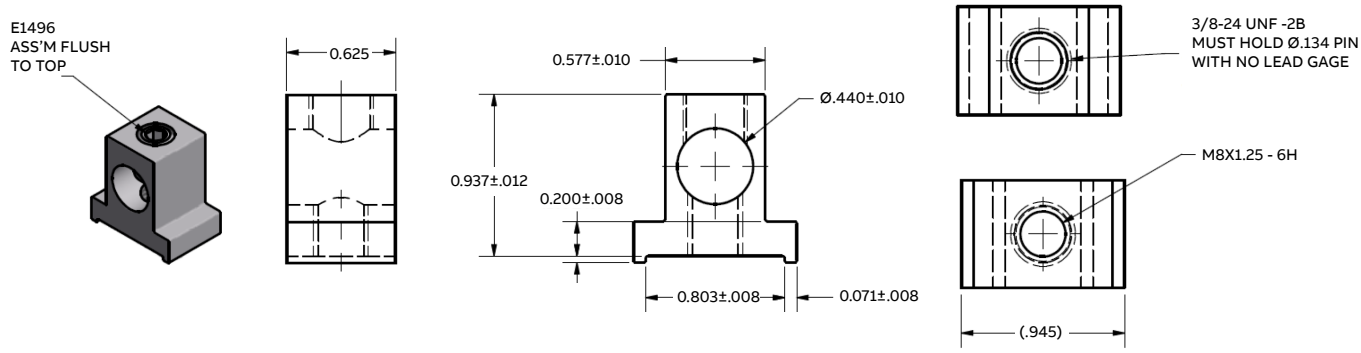

OZXA-200

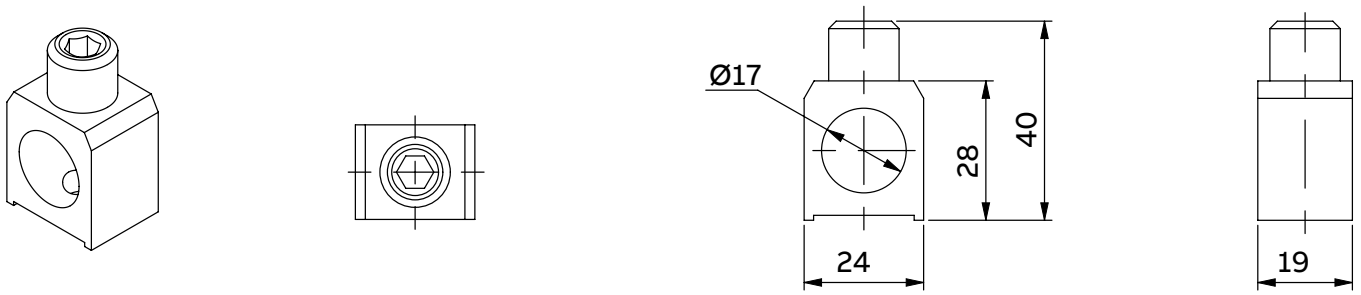

OZXA-252

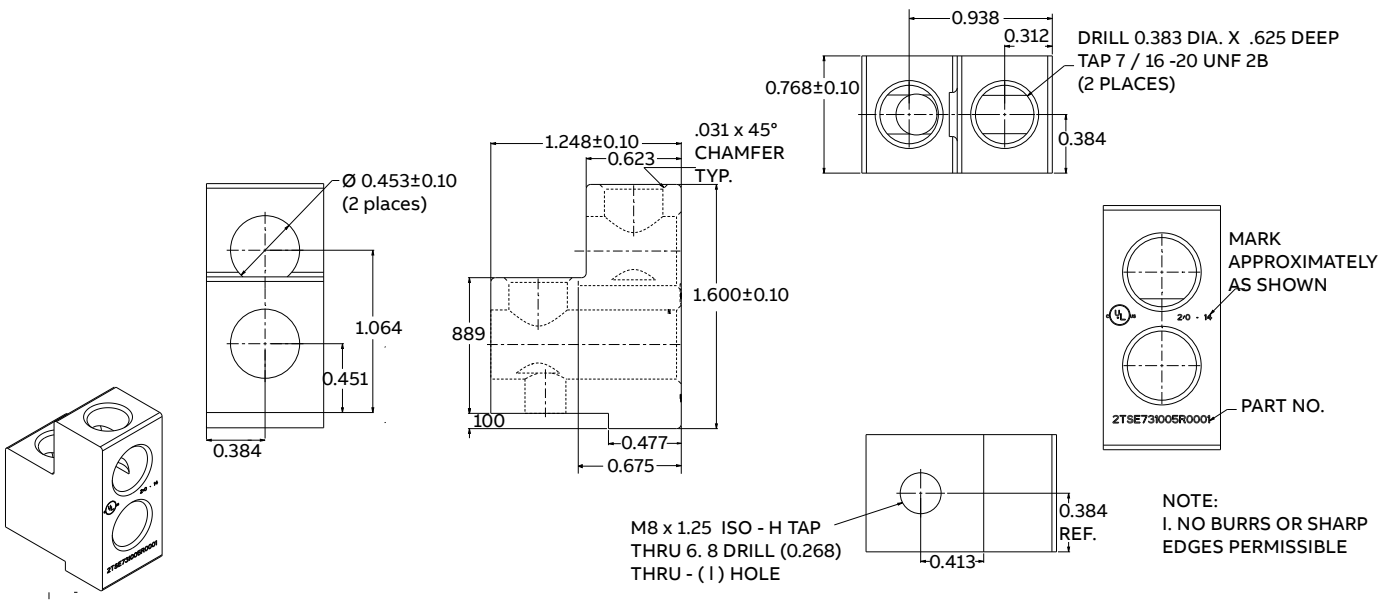

Dimensional drawings

Mechanical lugs

OTDC M – 315...1000 Amperes (IEC and UL)

OZXA-402

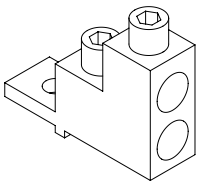

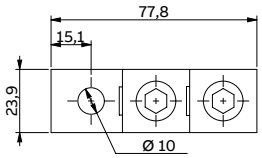

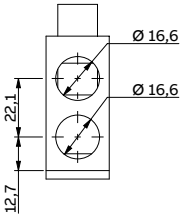

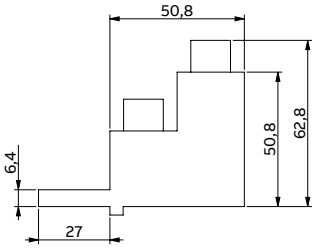

OZXA-604

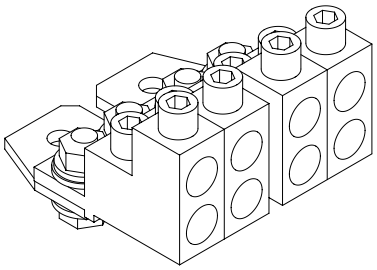

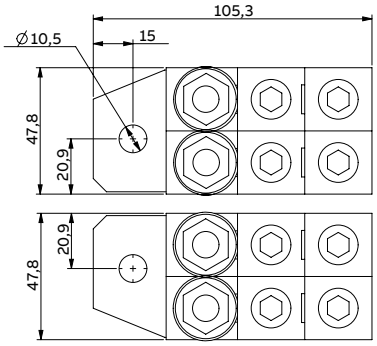

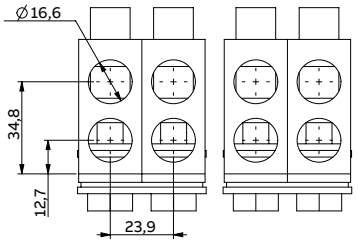

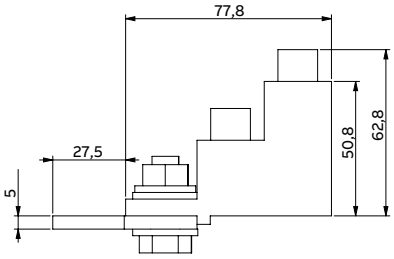

OZXA-804

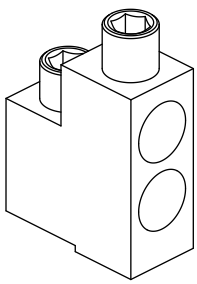

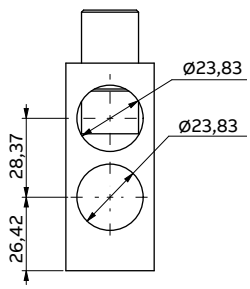

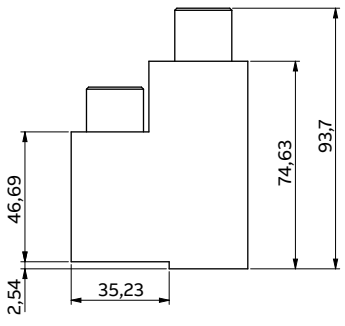

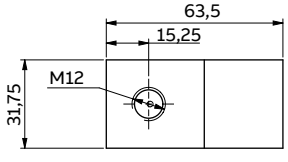

Additional resources
OTDC switch-disconnectors

Do you need additional information?
Visit our websites to find out more

OTDC Switch-disconnectors
Website

Low Voltage Solutions for Solar Power
Website

OT Disconnectors
1600...4000A, DC-20

Low Voltage Solutions for Energy Storage Systems (ESS)
Website

Installation instructions

Installation instructions for OTDC XS-Series
OTDC15...32U_

Installation instructions for OTDC S2.0-Series
(OTDC100…250_G_)

Installation instructions for OTDC XS-Series
OTDC16...32F_

Installation instructions for OTDC M-Series
(OTDC315…800F_/OTDC250…600UF_)

Installation instructions for OTDC S1.0-Series
(OTDC100…250E_/OTDC100…200U)

Installation instructions for OTDC M-Series
(OTDC800…1000F_/OTDC800…1000UF_)

Additional information
We reserve the right to make technical changes or modify the contents of this document without prior notice. With regard to purchase orders, the agreed particulars shall prevail. ABB does not accept any responsibility whatsoever for potential errors or possible lack of information in this document.

We reserve all rights in this document and in the subject matter and illustrations contained therein. Any reproduction, disclosure to third parties or utilization of its contents – in whole or in parts – is forbidden without prior written consent of ABB.

—

ABB Electrification,
Smart Power

www.abb.com

Find the address of your local sales organization on the ABB homepage:

www.abb.com/contacts
> Low Voltage Products and Systems

© Copyright 2023 ABB. All rights reserved.
Specifications subject to change without notice.

1SCC301022C0201 - 2023-07